This drawing and all informations contained here can not be used or reproduced, integrally or partially, without written authorization by Colombo Sergio & Figli.

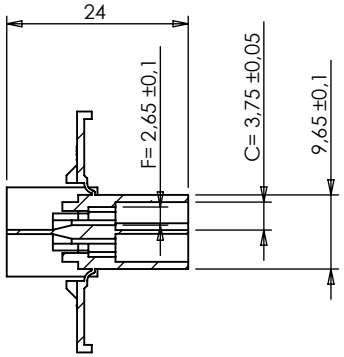

SEZIONE A-A

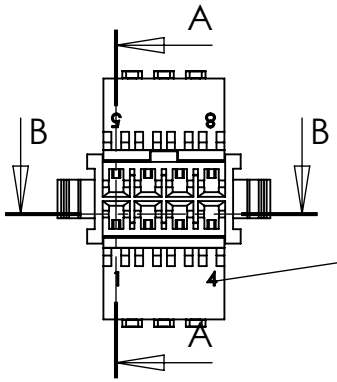

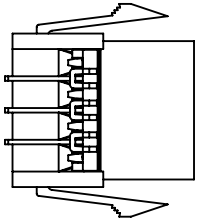

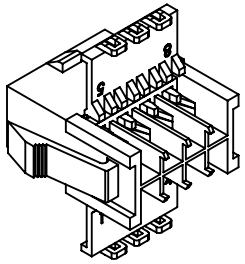

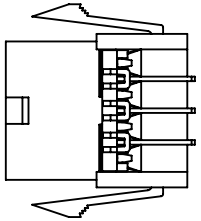

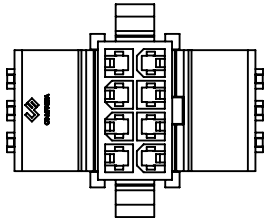

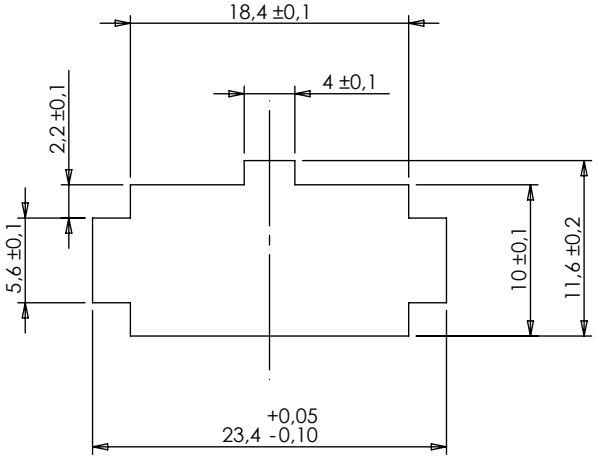

Spessore lamiera 0,8 - 2 mm

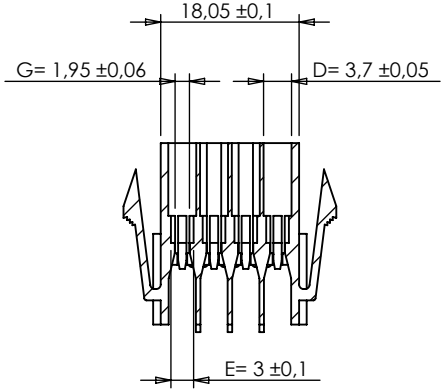

SEZIONE B-B

INDEX	MODIFICATION	DATE

COLOMBO SERGIO e Figli S.r.l.
20063 CERNUSCO S/N - VIA COMO, 11
TEL +39.02.9210.7404 - FAX +39.02.9210.0217
http://www.cscolombo.com - e-mail: info@cscolombo.com

CHECKED BY	DATE	DESIGN UNITS
Stefano Galimberti	15-02-2012	METRIC
DRAWN BY	DATE	WEIGHT
Stefano Querzoli	15-02-2012	

SCALE	CAD REFER	SIZE	INDEX 0
1:1	Y:\dis\cs\mft\mftxxf\mftxxfa sec lock\tavole\	A4	15-02-2012

BASE CODE	DESCRIPTION
CS-MFT42FA	MFT FEMALE CONNECTOR FOR PANEL, 4X2 POLES

PART NUMBER	MATERIAL
CS-MFT42FA	PA66 UL94 V-2
CS-MFT42FAV0	PA6/66 UL94 V-0
CS-MFT42FAV0750NF	PA66 UL94 V-0 GWIT 775
CS-MFT42FA-G	PA6 UL94 V-2 GWIT 775

DIMENSIONS WITHOUT TOLERANCES		
∢ ±2°	0 - 6	±0.1
	6 - 30	±0.2
	> 30	±0.3