REVISION HISTORY				
ECO	REV	DESCRIPTION	APPROVED	DATE
–	2	PRODUCTION	WALKER B.	03-26-12

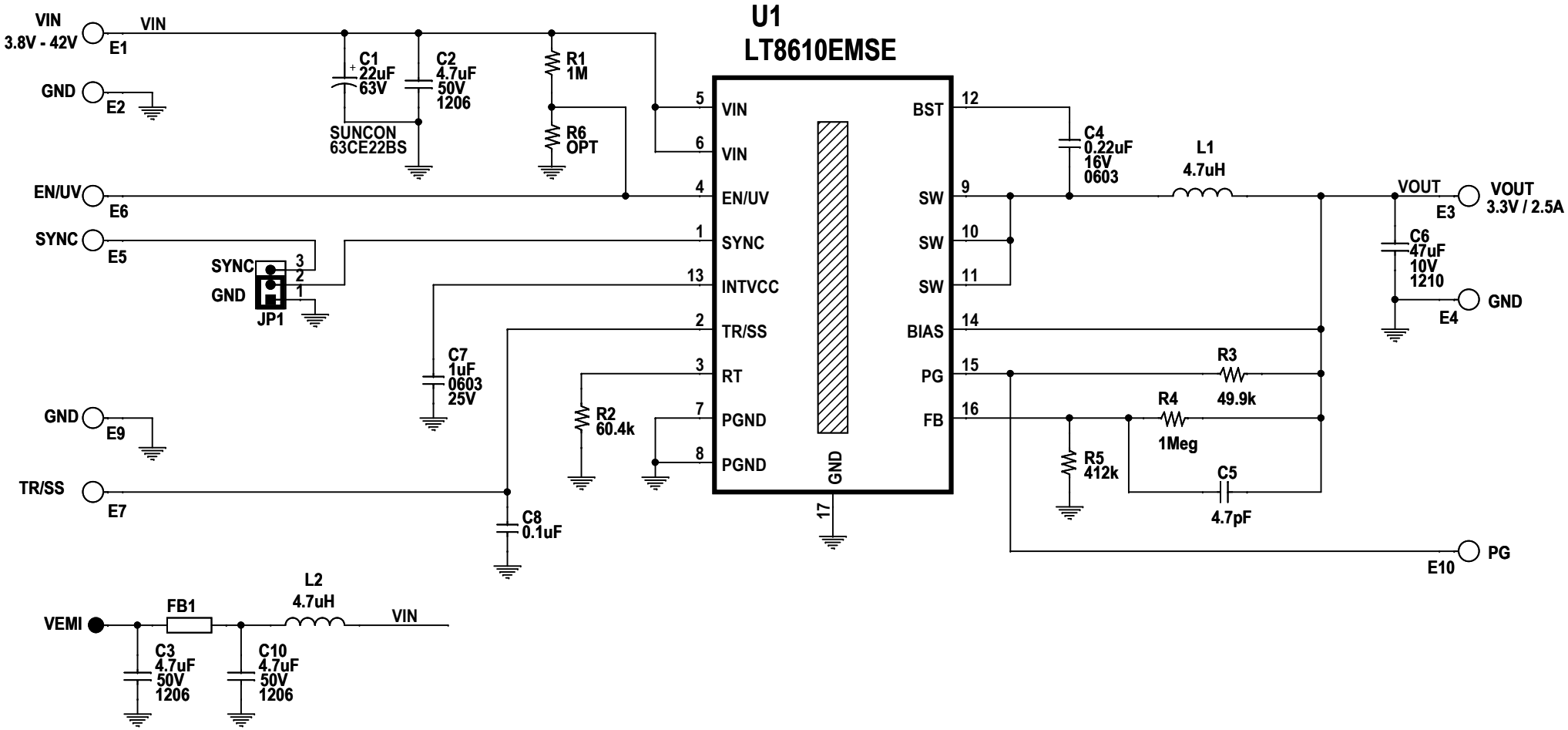

NOTES: UNLESS OTHERWISE SPECIFIED

1. ALL RESISTORS ARE 0402.
   ALL CAPACITORS ARE 0402.

CUSTOMER NOTICE

LINEAR TECHNOLOGY HAS MADE A BEST EFFORT TO DESIGN A CIRCUIT THAT MEETS CUSTOMER-SUPPLIED SPECIFICATIONS; HOWEVER, IT REMAINS THE CUSTOMER'S RESPONSIBILITY TO VERIFY PROPER AND RELIABLE OPERATION IN THE ACTUAL APPLICATION. COMPONENT SUBSTITUTION AND PRINTED CIRCUIT BOARD LAYOUT MAY SIGNIFICANTLY AFFECT CIRCUIT PERFORMANCE OR RELIABILITY. CONTACT LINEAR TECHNOLOGY APPLICATIONS ENGINEERING FOR ASSISTANCE.

THIS CIRCUIT IS PROPRIETARY TO LINEAR TECHNOLOGY AND SUPPLIED FOR USE WITH LINEAR TECHNOLOGY PARTS.

APPROVALS	
PCB DES.	JW
APP ENG.	WALKER B.

SCALE = NONE

LINEAR TECHNOLOGY
1630 McCarthy Blvd.
Milpitas, CA 95035
Phone: (408)432-1900 www.linear.com
Fax: (408)434-0507

LTC Confidential-For Customer Use Only

TITLE: SCHEMATIC
42V, 2.5A MICROPOWER SYNCHRONOUS STEP-DOWN REGULATOR

SIZE	IC NO.	REV.
N/A	LT8610EMSE DEMO CIRCUIT 1749A	2

DATE: Tuesday, April 10, 2012 SHEET 1 OF 1