PART NO. TT253N

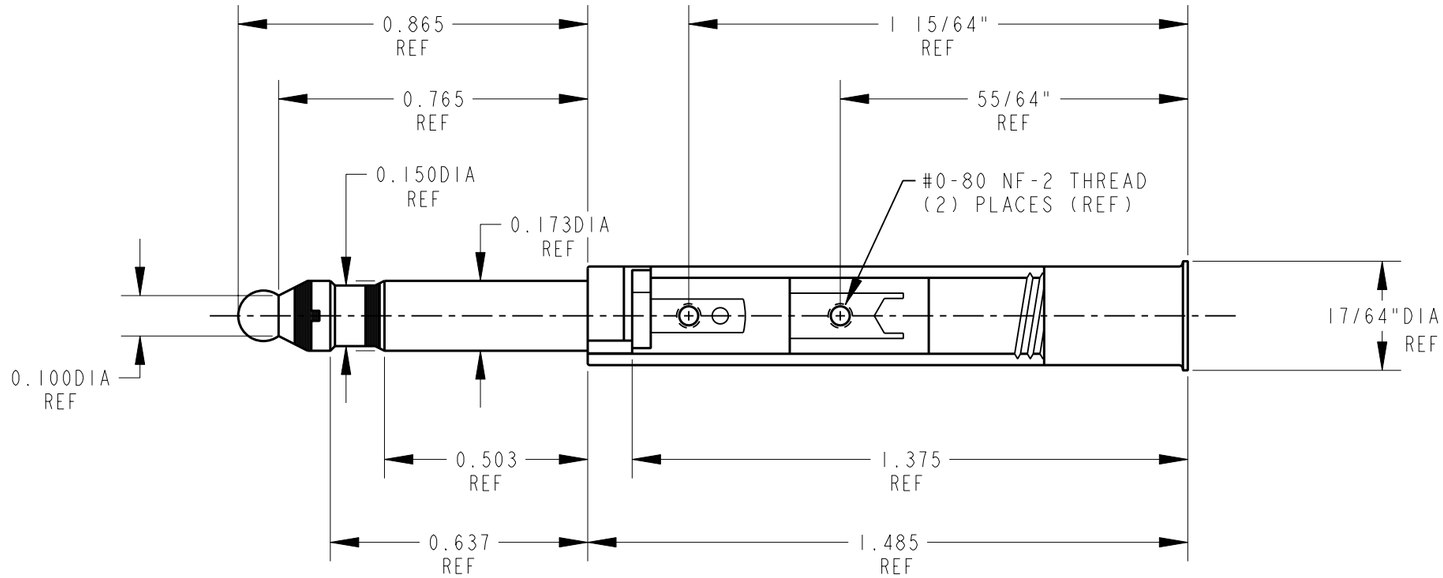

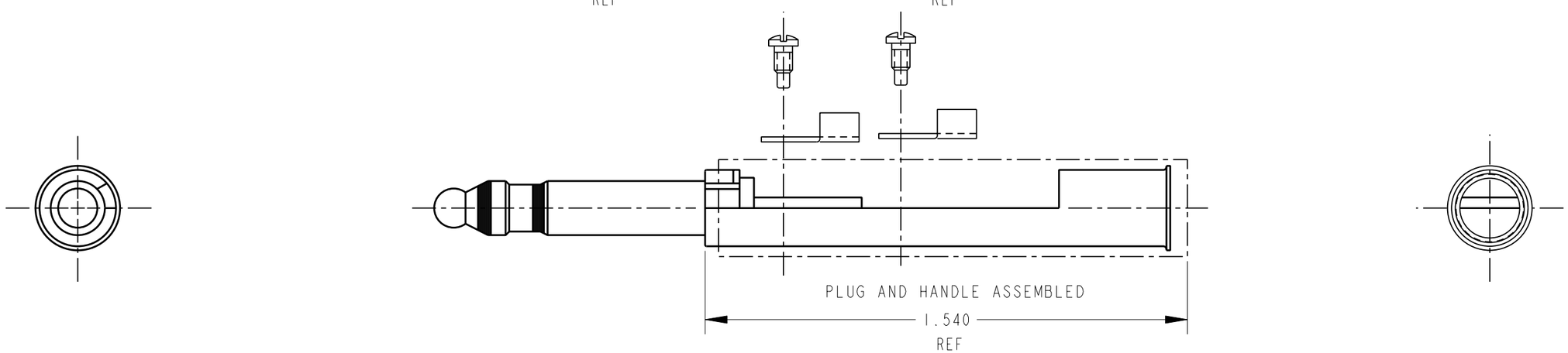

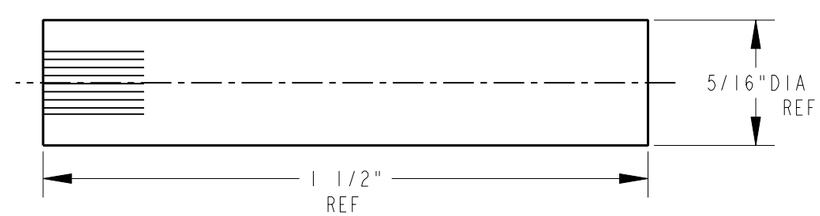

MATERIALS

TT PLUG ASSEMBLY - BRASS, NICKEL PLATED

TT PLUG INSULATION - BRASS, SILVER PLATED

HANDLE - BLACK THERMOPLASIC

TERMINAL - BRASS

#0-80 SCEW - BRASS

CUSTOMER DRAWING

CAD/CAM DWG. NO.
TT253N_CD

SHEET 1 OF 1

ISSUE	CHANGE NO.	DATE	BY	APP'D
C	ECO #21272	9-3-96	DA	MW
B	ECO #19704	3-24-95	RC	GHJ
A	FIRST DRAWN	8-21-93	LR	GHJ

REVISIONS

☆ STAR SYMBOL DENOTES CRITICAL DIMENSION, SEE S/C ENGINEERING STANDARD ES-0001

UNLESS OTHERWISE SPECIFIED

1. ALL DIMENSIONS IN INCHES
   TWO PLACE DECIMAL ±.01
   THREE PLACE DECIMAL ±.005
   FRACTIONAL DIMENSIONS ±1/64
   ANGLES ±1/2°
   ALL DIA'S CONCENTRIC WITHIN .005 T.I.R.
2. REMOVE ALL BURRS
3. MAKE NO DIMENSIONAL ALLOWANCES FOR APPLIED FINISHES, I.E., PLATING, PAINTING, ETC.
4. HOLES ON THE SAME CENTERLINE MUST BE ALIGNED WITHIN ±.002

DO NOT SCALE DRAWING

THIS DRAWING DESCRIBES A DESIGN CONSIDERED PROPRIETARY IN NATURE, DEVELOPED AND MANUFACTURED BY SWITCHCRAFT INC. AND IS RELEASED ON A CONFIDENTIAL BASIS FOR IDENTIFICATION PURPOSE ONLY.

SIZE	WIDTH	MULT	LBS./M	TEMPER

FINISH .
SPEC. NO. .

MATERIAL .
SPEC. NO. .

FIRST USED ON .

SCALE 1 = 0.375

DATE DRAWN	BY	CHK'D	APP'D
8-21-93	LR	TO 8-27-93	GHJ 8-27-93

Switchcraft®

NAME TT PHONE PLUG

PART NO. TT253N

ISSUE C

Pro/Engineer CAD File

B

ROUTING