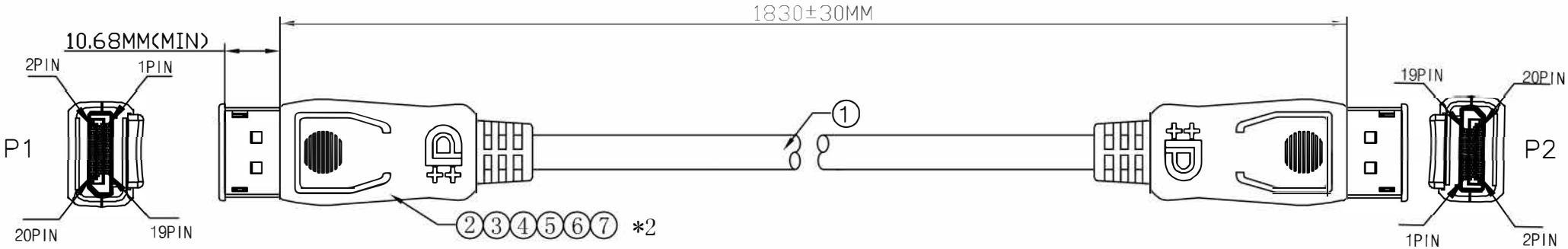

Electrical Test:

1. 100%Test(Open ,short ,miss wire)
2. Contact Resistance: 2 ohm Max
3. Insulation Resistance: 10M ohm Min
4. Hi-Pot: 100V DC/10ms

Pin Assignment

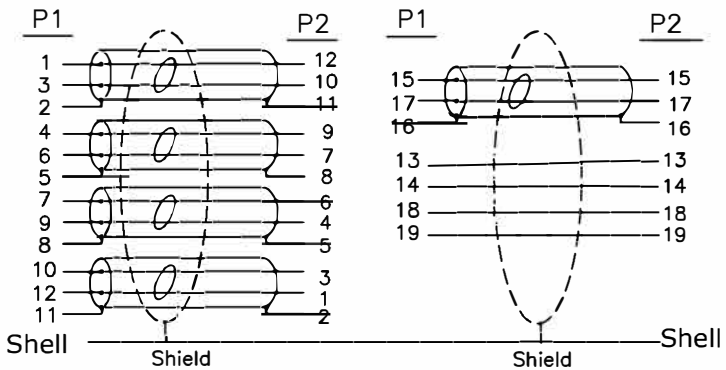

NO.	DESCRIPTION	Q'TY	UNIT
7	Inside Molding: LDPE	5	g
6	Outside Molding: 45P PVC	12	g
5	copper foil:25u W=8MM	0.09	M
4	DisplayPort Port M ABS Shell Color: Black	2	pcs
3	DisplayPort Port M The tin	2	pcs
2	DisplayPort Port M Insulation Black Shell Gold Plated	2	pcs
1	DP1.4~[30AWG(7/0.10TC)+EAM]*5P+30AWG(7/0.10TC)*4C+AEB(16/10/0.12 85%AL)OD:6.0MM~Color: Black Marking:DisplayPort Cable E342987 兄 AWM STYLE 20276 80℃ 30V VW-1	1.85	M

	TOLERANCE INCHES	M/M
.X	.015	.30
.XX	.010	.10
.XXX	.005	.05
DRAWN BY	Hong	
CHECK BY		
APPD BY		

Unirise

TITLE: Display Port 1.4 M TO M

CUSTOMER :	
CUSTOMER P/N:	DP-XXF-MM-V1.4
SCALE	NONE
UNIT	MM
DATE	2020.07.09
DRAWING NO:	
REV	A0
	1/1