Mounting Option
04-.156 (3.96) Dia. Mounting Holes

Contact Detail
559-90 Degree Bend (Code 541 Contacts)
.100 [2.54] Contact Spacing x .200 [5.08] Row Spacing

THIS IS A C.A.D. GENERATED DRAWING
DO NOT MAKE MANUAL REVISIONS TO MASTER

ISSUE NUMBER
ORIGINAL 1

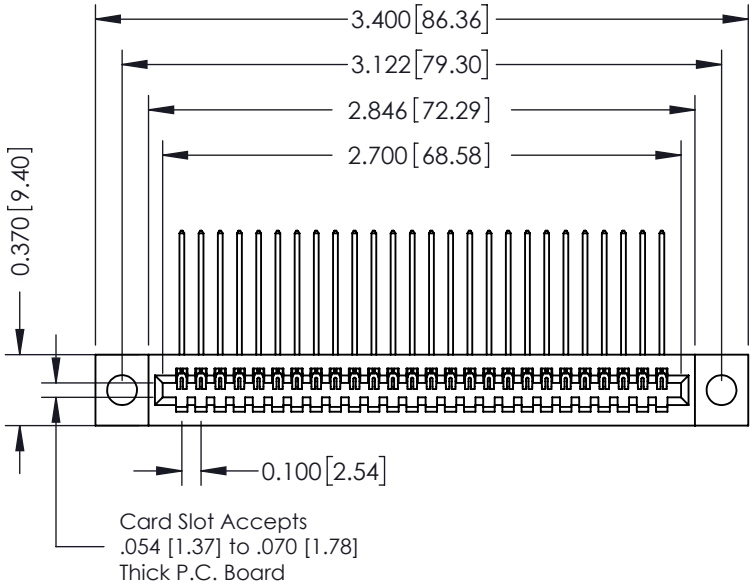

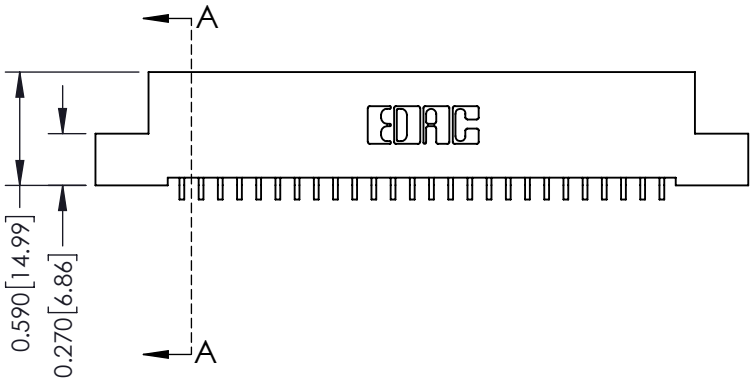

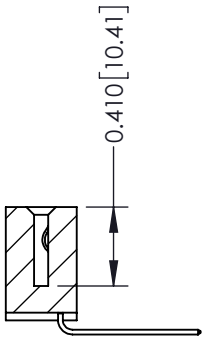

SECTION A-A

See Accompanying Pages for:
- **Contact Bend Details**
- **Mounting Options**

342 / 392 Card Edge Connector
Part Number: 392-026-559-104

EDAC INC
TORONTO, ONTARIO
CANADA
YOUR CONNECTION TO QUALITY & SERVICE

THESE DRAWINGS AND SPECIFICATIONS ARE THE PROPERTY OF EDAC INC., AND SHALL NOT BE REPRODUCED, OR COPIED OR USED AS THE BASIS FOR THE MANUFACTURE OR SALE OF APPARATUS WITHOUT WRITTEN PERMISSION.

ACAD REFERENCE NO.	342 ENG MASTER
DRAWN: J.LEE	DATE: OCT. 06/09
CHECKED:	DATE:
SCALE: NTS	SHEET 1 OF 3
DRAWING NUMBER: 342 Assembly	ISSUE: 1

THIS IS A C.A.D. GENERATED DRAWING
DO NOT MAKE MANUAL REVISIONS TO MASTER

ISSUE NUMBER
ORIGINAL 1

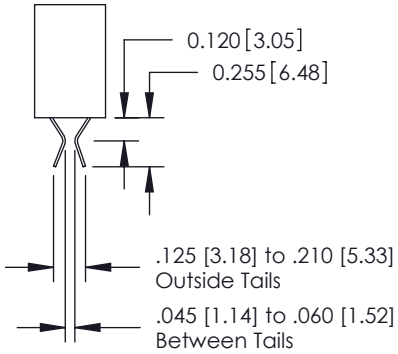

555 Contact Code

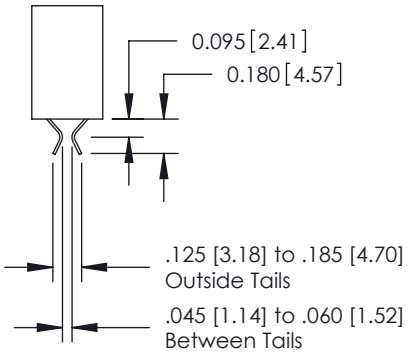

556 Contact Code

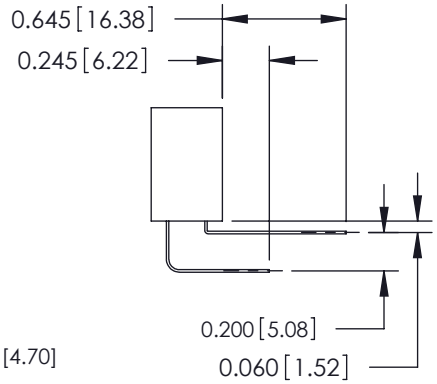

558 Contact Code

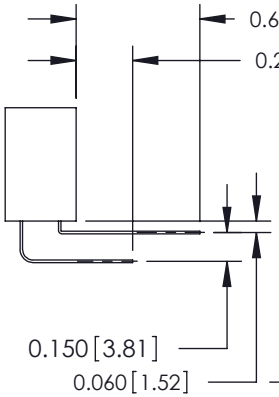

559 Contact Code

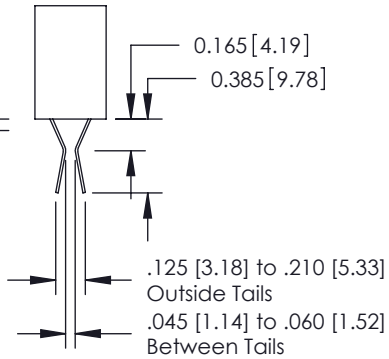

560 Contact Code

342 / 392 Series Card Edge Connector Contact Bend Detail

ACAD REFERENCE NO.	342 ENG MASTER
DRAWN: J.LEE	DATE: OCT. 06/09
CHECKED:	DATE:
SCALE: NTS	SHEET 2 OF 3
DRAWING NUMBER: 342 Assembly	ISSUE: 1

EDAC INC
TORONTO, ONTARIO
CANADA
YOUR CONNECTION TO QUALITY & SERVICE

THESE DRAWINGS AND SPECIFICATIONS ARE THE PROPERTY OF EDAC INC., AND SHALL NOT BE REPRODUCED, OR COPIED OR USED AS THE BASIS FOR THE MANUFACTURE OR SALE OF APPARATUS WITHOUT WRITTEN PERMISSION.

THIS IS A C.A.D. GENERATED DRAWING
DO NOT MAKE MANUAL REVISIONS TO MASTER.

ISSUE NUMBER
ORIGINAL 1

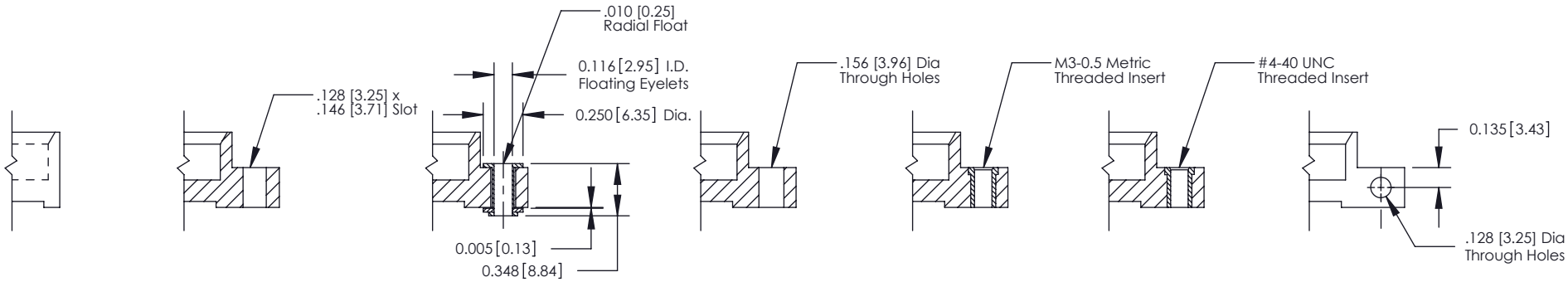

Code x01 Code x02 Code x03 Code x04 Code x07 Code x08 Code x12

342 / 392 Card Edge Connector Mounting Options

EDAC INC
TORONTO, ONTARIO
CANADA
YOUR CONNECTION TO QUALITY & SERVICE

THESE DRAWINGS AND SPECIFICATIONS ARE THE PROPERTY OF EDAC INC.,AND SHALL NOT BE REPRODUCED,OR COPIED OR USED AS THE BASIS FOR THE MANUFACTURE OR SALE OF APPARATUS WITHOUT WRITTEN PERMISSION.

ACAD REFERENCE NO.	342 ENG MASTER
DRAWN: J.LEE	DATE: OCT. 06/09
CHECKED:	DATE:
SCALE: NTS	SHEET 3 OF 3
DRAWING NUMBER: 342 Assembly	ISSUE: 1