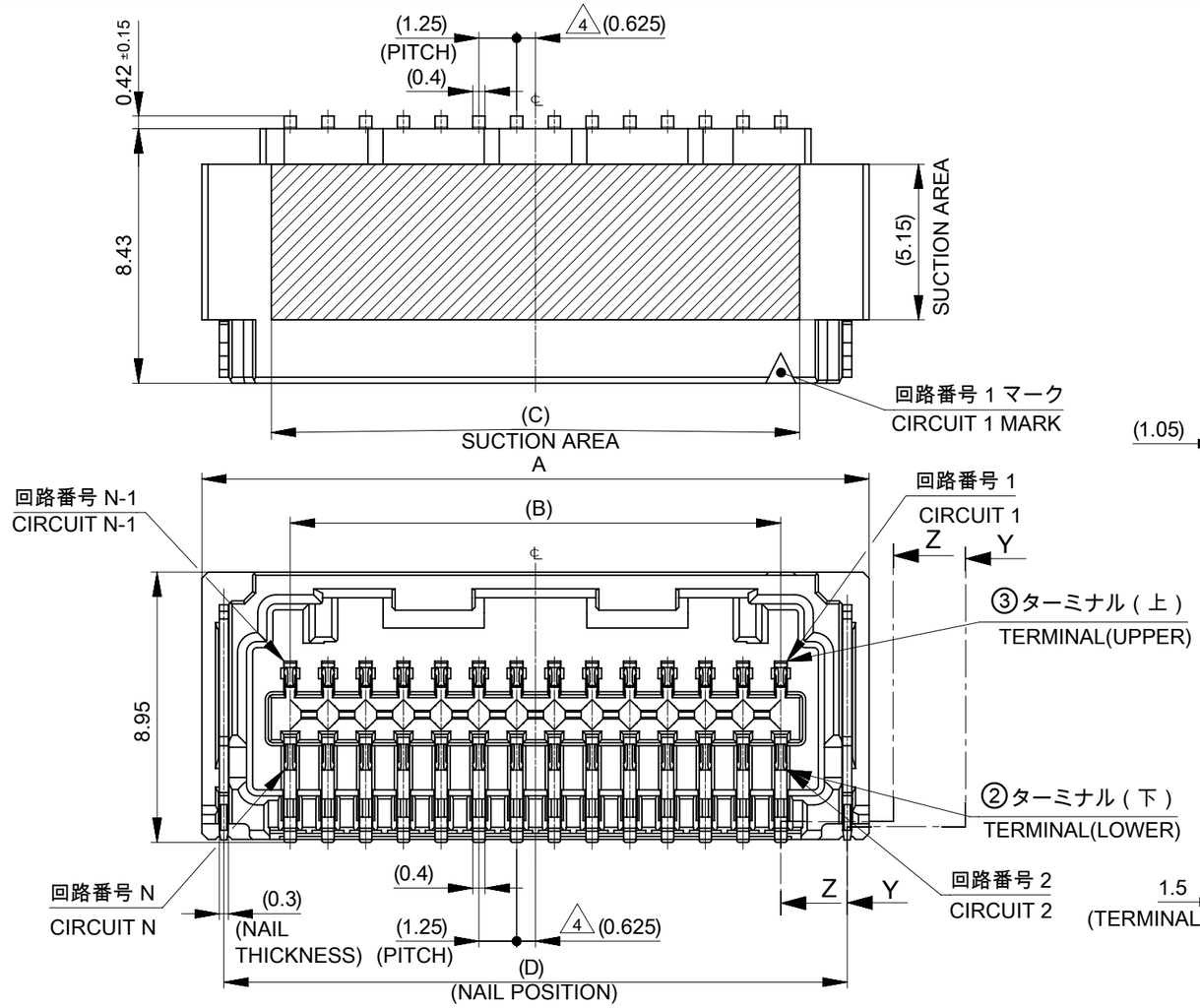

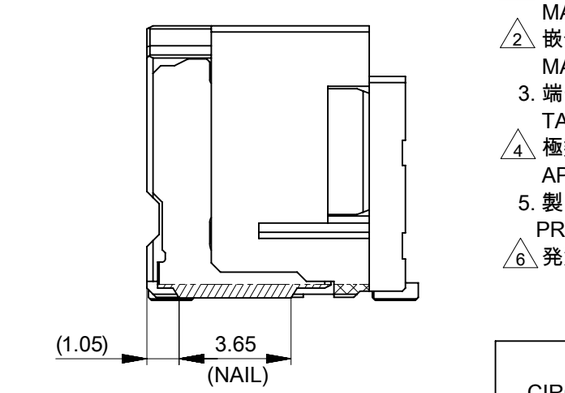

SECTION Y-Y

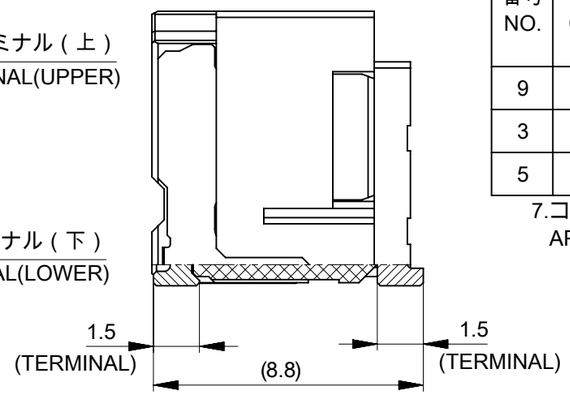

SECTION Z-Z

注記 NOTES

1. 材料及び仕上げ（めっき仕様）：TABLE 1, TABLE2 参照
   MATERIAL AND FINISHES(PLATING SPECIFICATION) : SEE TABLE 1, TABLE2.
2. 嵌合相手：505432シリーズ
   MATE WITH : 505432 SERIES
3. 端子テール部 及び ネイルの平坦度：0.12 MAXIMUM.
   TAIL AND NAIL COPLANARITY TO BE 0.12 MAXIMUM.
4. 極数 / 2 = 偶数に適用。
   APPLY TO CIRCUIT SIZE / 2 = EVEN.
5. 製品仕様書：5054320000 PS 006
   PRODUCT SPECIFICATION : 5054320000 PS 006
6. 発注番号 ORDER NUMBER

505448 ** * *

極数 CIRCUIT SIZE

番号 NO.	接点部 金めっき厚 CONTACT GOLD PLATING THICKNESS [MICROMETER MINIMUM]
9	0.1
3	0.38
5	0.76

番号 NO.	ハウジングカラー HOUSING COLOR
0	ナチュラル（ベージュ） NATURAL(BEIGE)
1	黒 BLACK
2	赤 RED
4	青 BLUE
6	緑 GREEN

7.コネクタ取扱説明書：5054320000-AS PS 000
APPLICATION SPECIFICATION : 5054320000-AS PS 000

H	G	F	E	D	C	B	A	極数 CIRCUIT SIZE
49.4	45.4	20.2	44 ±0.3	29.4	26.25	25	30.85	42
				28.15	25	23.75	29.6	40
				26.9	23.75	22.5	28.35	38
				25.65	22.5	21.25	27.1	36
				24.4	21.25	20	25.85	34
				23.15	20	18.75	24.6	32
				21.9	18.75	17.5	23.35	30
				20.65	17.5	16.25	22.1	28
				19.4	16.25	15	20.85	26
37.4	33.4	14.2	32 ±0.3	18.15	15	13.75	19.6	24
				16.9	13.75	12.5	18.35	22
				15.65	12.5	11.25	17.1	20
				14.4	11.25	10	15.85	18
				13.15	10	8.75	14.6	16
29.4	25.4	11.5	24 +0.3 -0.1	11.9	8.75	7.5	13.35	14
				10.65	7.5	6.25	12.1	12
				9.4	6.25	5	10.85	10
				8.15	5	3.75	9.6	8

1 TABLE 1

番号 NO.	部品 PART	材質 MATERIAL
①	ハウジング HOUSING	POLYAMIDE(PA) UL94V-0 色：SHEET 4参照 POLYAMIDE(PA) UL94V-0 COLOR : SEE SHEET 4.
② ③	ターミナル TERMINAL	黄銅 BRASS
		接点部：金めっき めっき厚は注記6参照 CONTACT : GOLD PLATING PLATING THICKNESS : SEE NOTE 6.
		ニッケルめっき（下地めっき）: 2.0 MICROMETER MINIMUM NICKEL PLATING (UNDER PLATING)
④	ネイル NAIL	黄銅 BRASS
		錫ビスマスめっき：1.0 MICROMETER MINIMUM TIN-BISMUTH PLATING
		ニッケルめっき（下地めっき）: 1.0 MICROMETER MINIMUM NICKEL PLATING (UNDER PLATING)

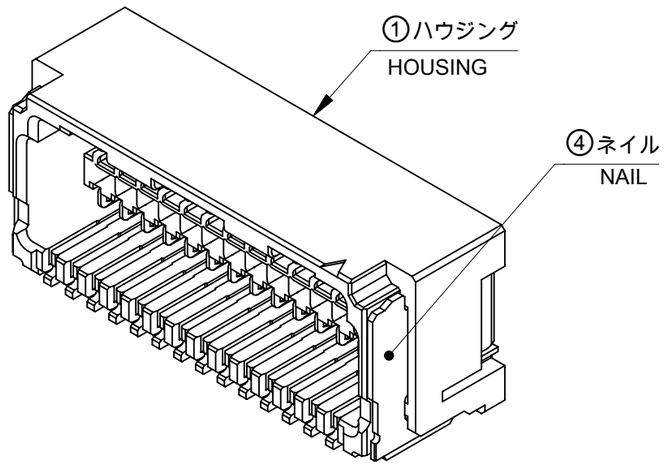

THIS DRAWING CONTAINS INFORMATION THAT IS PROPRIETARY TO MOLEX ELECTRONIC TECHNOLOGIES, LLC AND SHOULD NOT BE USED WITHOUT WRITTEN PERMISSION

DIMENSION UNITS	SCALE
mm	NTS

GENERAL TOLERANCES (UNLESS SPECIFIED)

ANGULAR TOL	±	3.0 °
4 PLACES	±	0.2
3 PLACES	±	0.2
2 PLACES	±	0.2
1 PLACE	±	0.2
0 PLACES	±	0.2

DRAFT WHERE APPLICABLE MUST REMAIN WITHIN DIMENSIONS

CURRENT REV DESC:

EC NO: 720259
DRWN: SOKUMURA01 2022/11/09
CHK'D: SAKIYAMA 2022/11/28
APPR: AIDA 2022/11/30

INITIAL REVISION:
DRWN: TAKAIKE 2019/08/21
APPR: AIDA 2019/12/26

THIRD ANGLE PROJECTION | DRAWING: A3-SIZE | SERIES: 505448

molex

MICRO-LOCK PLUS 1.25 W/B
DUAL ROW RIGHT ANGLE SMT PLUG ASSEMBLY
GOLD PLATING

PRODUCT CUSTOMER DRAWING

DOCUMENT NUMBER	DOC TYPE	DOC PART	REVISION
5054480003-SD	PSD	000	C

MATERIAL NUMBER	CUSTOMER	SHEET NUMBER
SEE SHEET 4	GENERAL	1 OF 4

DOCUMENT STATUS	P1	RELEASE DATE	2022/11/30 05:04:04

FORMAT: master-tb-prod-A3
REVISION: J1
DATE: 2021/05/01

製品形状
PRODUCT SHAPE

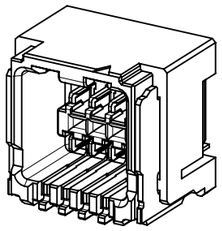

8-14極
8-14 CIRCUIT

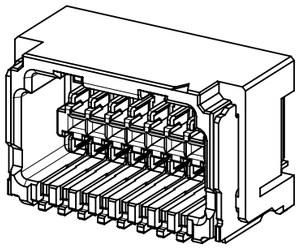

16-24極
16-24 CIRCUIT

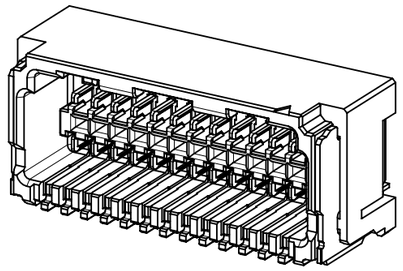

26-32極
26-32 CIRCUIT

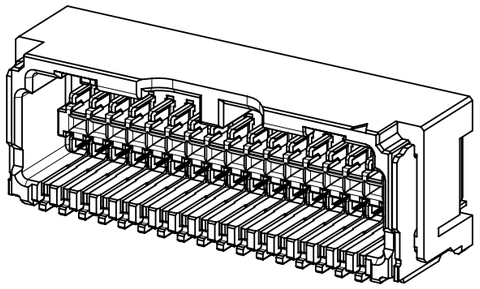

34-40極
34-40 CIRCUIT

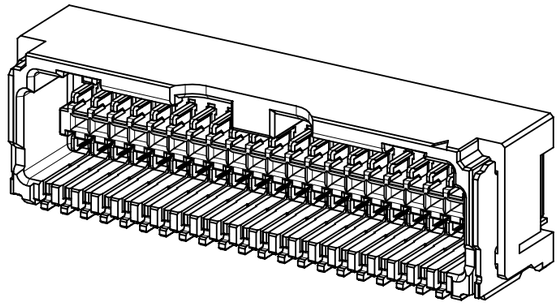

42極
42 CIRCUIT

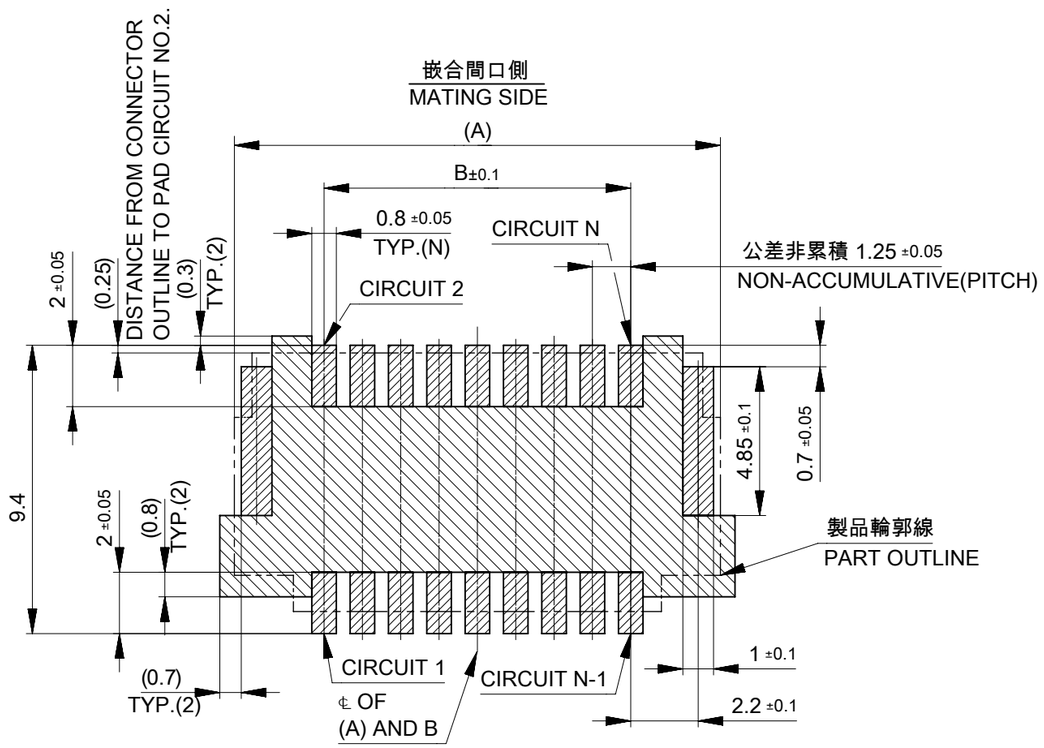

基板パターンレイアウト (参考)
(参考 : 基板厚 1.6mm, メタルマスク厚さ 0.15mm, マスク開口率 100%)

RECOMMEND PCB LAYOUT : COMPONENT SIDE
(REFERENCE : PCB THICKNESS 1.6mm, STENCIL THICKNESS 0.15mm, APERTURE RATIO 100%)

パターン非推奨エリア
パターンを引き回す際は、製品機能に影響がないことをご確認ください。
PATTERN IS NOT RECOMMENDED ON THE HATCHING AREA
PLEASE CHECK NOT TO HAVE PROBLEM FOR PRODUCT FUNCTION
WHEN SETTING PATTERN ON THE HATCHING AREA.

嵌合状態図
MATED CONNECTORS

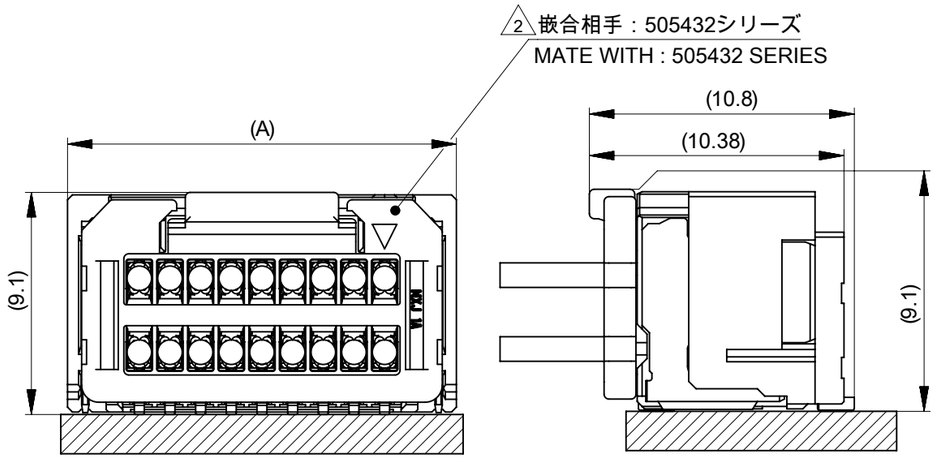

THIS DRAWING CONTAINS INFORMATION THAT IS PROPRIETARY TO MOLEX ELECTRONIC TECHNOLOGIES, LLC AND SHOULD NOT BE USED WITHOUT WRITTEN PERMISSION

DIMENSION UNITS	SCALE
mm	NTS

GENERAL TOLERANCES (UNLESS SPECIFIED)

ANGULAR TOL	±	3.0 °
4 PLACES	±	0.2
3 PLACES	±	0.2
2 PLACES	±	0.2
1 PLACE	±	0.2
0 PLACES	±	0.2

DRAFT WHERE APPLICABLE MUST REMAIN WITHIN DIMENSIONS

CURRENT REV DESC:

EC NO: 720259
DRWN: SOKUMURA01 2022/11/09
CHK'D: SAKIYAMA 2022/11/28
APPR: AIDA 2022/11/30

INITIAL REVISION:
DRWN: TAKAIKE 2019/08/21
APPR: AIDA 2019/12/26

molex

MICRO-LOCK PLUS 1.25 W/B
DUAL ROW RIGHT ANGLE SMT PLUG ASSEMBLY
GOLD PLATING

PRODUCT CUSTOMER DRAWING

DOCUMENT NUMBER	DOC TYPE	DOC PART	REVISION
5054480003-SD	PSD	000	C

THIRD ANGLE PROJECTION	DRAWING	SERIES	MATERIAL NUMBER	CUSTOMER	SHEET NUMBER
	A3-SIZE	505448	SEE SHEET 4	GENERAL	2 OF 4

DOCUMENT STATUS	P1	RELEASE DATE	2022/11/30 05:04:04

FORMAT: master-tb-prod-A3
REVISION: J1
DATE: 2021/05/01

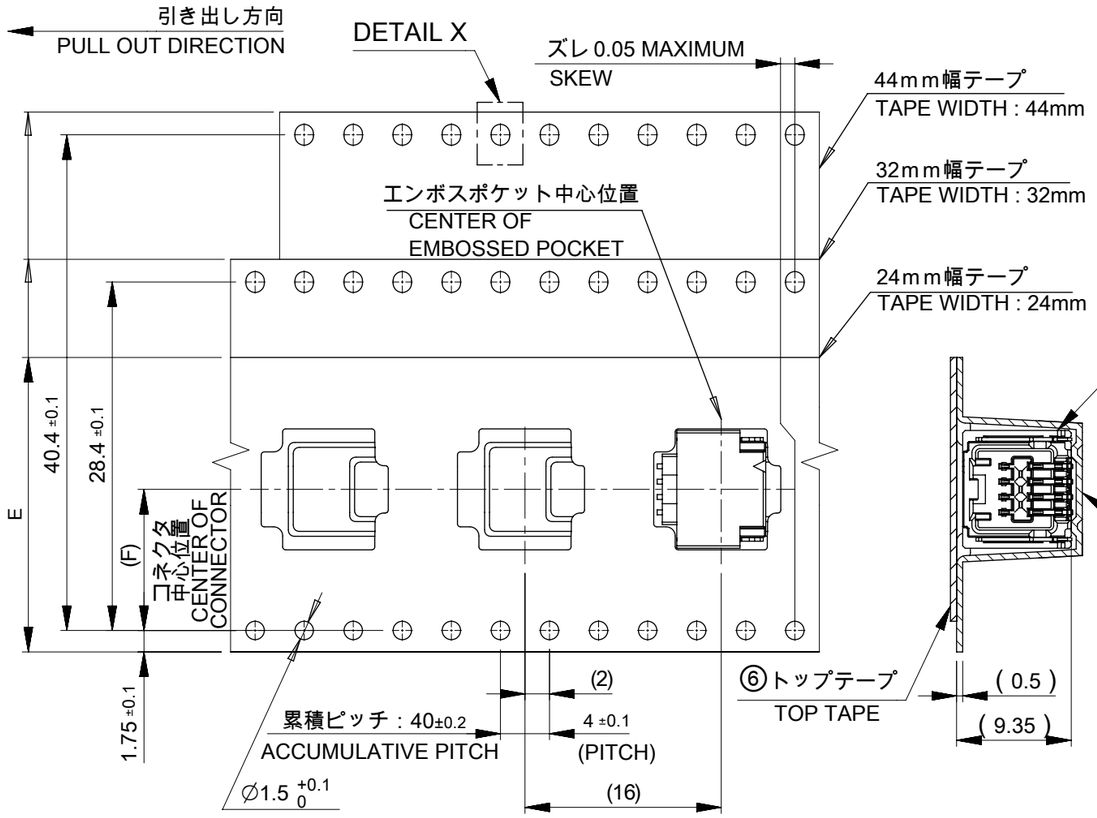

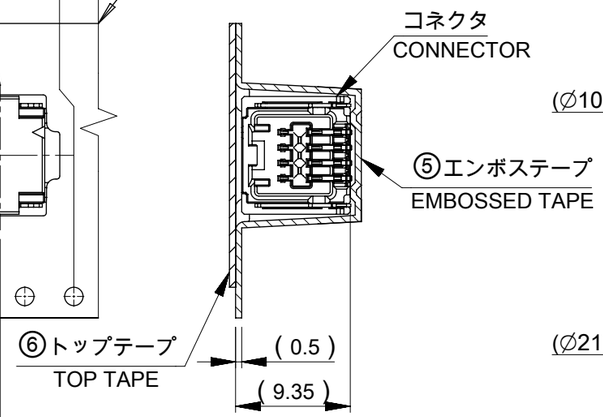

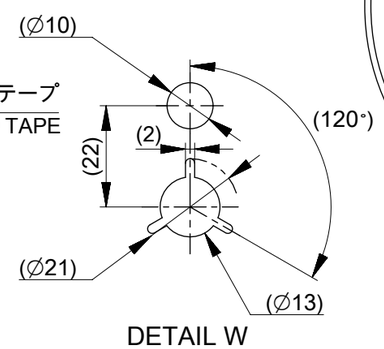

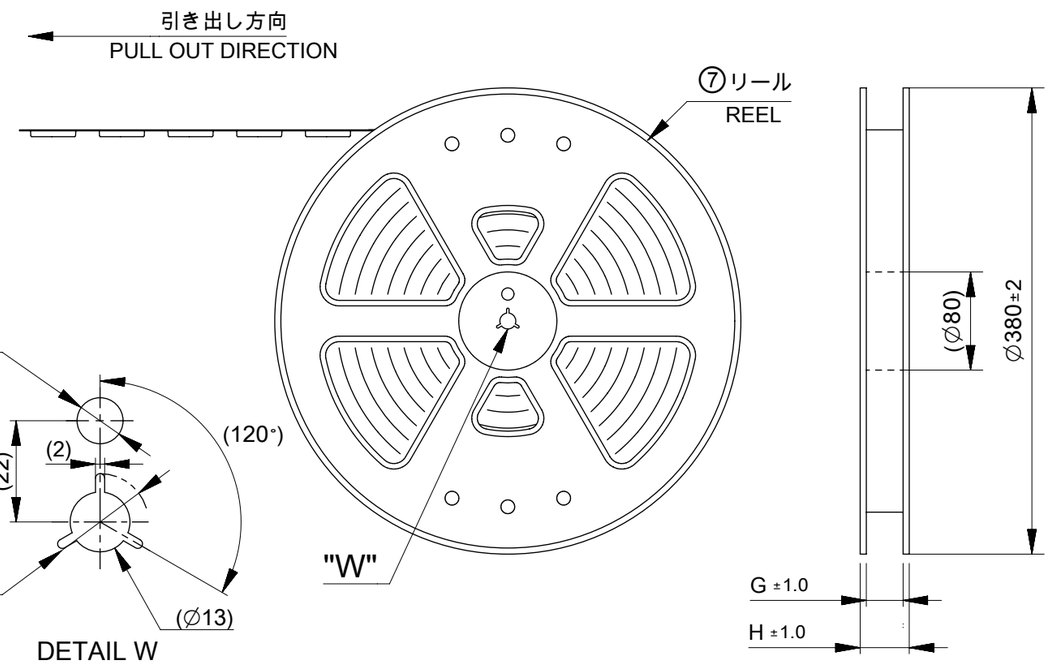

注記 NOTES

8. 梱包数量　：　500個
   NUMBER OF CONNECTIORS : 500 PIECES/REEL.
9. 梱包仕様書：5054489200 PS 200
   PACKING SPECIFICATION : 5054489200 PS 200
10. リードテープ長さ
    LEAD TAPE LENGTH

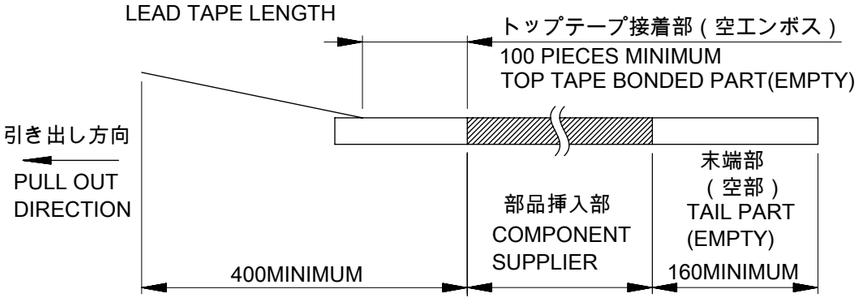

11. トップテープの剥離強度については、IEC60286-3に準拠
    TOP TAPE PEEL FORCE IS DEFINED BY IEC60286-3.

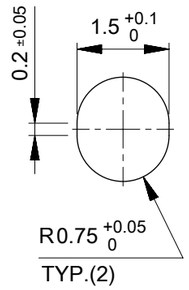

△1 TABLE 2

番号 NO.	部品 PART	材質 MATERIAL
⑤	エンボステープ EMBOSSED TAPE	ポリスチレン(PS) POLYSTYRENE(PS)
⑥	トップテープ TOP TAPE	ポリエチレン(PE)、その他 POLYETHYLENE(PE), OTHER
⑦	リール REEL	ポリスチレン(PS) <リサイクル材を含む> POLYSTYRENE(PS) <RECYCLE MATERIRAL CONTAINED>

DOCUMENT STATUS	P1	RELEASE DATE	2022/11/30 05:04:04

THIS DRAWING CONTAINS INFORMATION THAT IS PROPRIETARY TO MOLEX ELECTRONIC TECHNOLOGIES, LLC AND SHOULD NOT BE USED WITHOUT WRITTEN PERMISSION

DIMENSION UNITS	SCALE
mm	NTS

GENERAL TOLERANCES (UNLESS SPECIFIED)

ANGULAR TOL	±	3.0 °
4 PLACES	±	0.2
3 PLACES	±	0.2
2 PLACES	±	0.2
1 PLACE	±	0.2
0 PLACES	±	0.2

DRAFT WHERE APPLICABLE MUST REMAIN WITHIN DIMENSIONS

CURRENT REV DESC:

EC NO: 720259
DRWN: SOKUMURA01 2022/11/09
CHK'D: SAKIYAMA 2022/11/28
APPR: AIDA 2022/11/30

INITIAL REVISION:
DRWN: TAKAIKE 2019/08/21
APPR: AIDA 2019/12/26

THIRD ANGLE PROJECTION | DRAWING: A3-SIZE | SERIES: 505448

molex

MICRO-LOCK PLUS 1.25 W/B
DUAL ROW RIGHT ANGLE SMT PLUG ASSEMBLY
GOLD PLATING

PRODUCT CUSTOMER DRAWING

DOCUMENT NUMBER	DOC TYPE	DOC PART	REVISION
5054480003-SD	PSD	000	C

MATERIAL NUMBER	CUSTOMER	SHEET NUMBER
SEE SHEET 4	GENERAL	3 OF 4

6 505448**9* 発注番号一覧 ORDER NUMBER LIST

GREEN	BLUE	RED	BLACK	NATURAL (BEIGE)	HOUSING COLOR
5054484296	5054484294	5054484292	5054484291	5054484290	42
5054484096	5054484094	5054484092	5054484091	5054484090	40
5054483896	5054483894	5054483892	5054483891	5054483890	38
5054483696	5054483694	5054483692	5054483691	5054483690	36
5054483496	5054483494	5054483492	5054483491	5054483490	34
5054483296	5054483294	5054483292	5054483291	5054483290	32
5054483096	5054483094	5054483092	5054483091	5054483090	30
5054482896	5054482894	5054482892	5054482891	5054482890	28
5054482696	5054482694	5054482692	5054482691	5054482690	26
5054482496	5054482494	5054482492	5054482491	5054482490	24
5054482296	5054482294	5054482292	5054482291	5054482290	22
5054482096	5054482094	5054482092	5054482091	5054482090	20
5054481896	5054481894	5054481892	5054481891	5054481890	18
5054481696	5054481694	5054481692	5054481691	5054481690	16
5054481496	5054481494	5054481492	5054481491	5054481490	14
5054481296	5054481294	5054481292	5054481291	5054481290	12
5054481096	5054481094	5054481092	5054481091	5054481090	10
5054480896	5054480894	5054480892	5054480891	5054480890	8
発注番号 ORDER NUMBER					極数 CIRCUIT SIZE
梱包形態：エンボステープ梱包 PACKAGING STYLE : EMBOSSED TAPE AND REEL					

6 505448**5* 発注番号一覧 ORDER NUMBER LIST

GREEN	BLUE	RED	BLACK	NATURAL (BEIGE)	HOUSING COLOR
5054484256	5054484254	5054484252	5054484251	5054484250	42
5054484056	5054484054	5054484052	5054484051	5054484050	40
5054483856	5054483854	5054483852	5054483851	5054483850	38
5054483656	5054483654	5054483652	5054483651	5054483650	36
5054483456	5054483454	5054483452	5054483451	5054483450	34
5054483256	5054483254	5054483252	5054483251	5054483250	32
5054483056	5054483054	5054483052	5054483051	5054483050	30
5054482856	5054482854	5054482852	5054482851	5054482850	28
5054482656	5054482654	5054482652	5054482651	5054482650	26
5054482456	5054482454	5054482452	5054482451	5054482450	24
5054482256	5054482254	5054482252	5054482251	5054482250	22
5054482056	5054482054	5054482052	5054482051	5054482050	20
5054481856	5054481854	5054481852	5054481851	5054481850	18
5054481656	5054481654	5054481652	5054481651	5054481650	16
5054481456	5054481454	5054481452	5054481451	5054481450	14
5054481256	5054481254	5054481252	5054481251	5054481250	12
5054481056	5054481054	5054481052	5054481051	5054481050	10
5054480856	5054480854	5054480852	5054480851	5054480850	8
発注番号 ORDER NUMBER					極数 CIRCUIT SIZE
梱包形態：エンボステープ梱包 PACKAGING STYLE : EMBOSSED TAPE AND REEL					

6 505448**3* 発注番号一覧 ORDER NUMBER LIST

GREEN	BLUE	RED	BLACK	NATURAL (BEIGE)	HOUSING COLOR
5054484236	5054484234	5054484232	5054484231	5054484230	42
5054484036	5054484034	5054484032	5054484031	5054484030	40
5054483836	5054483834	5054483832	5054483831	5054483830	38
5054483636	5054483634	5054483632	5054483631	5054483630	36
5054483436	5054483434	5054483432	5054483431	5054483430	34
5054483236	5054483234	5054483232	5054483231	5054483230	32
5054483036	5054483034	5054483032	5054483031	5054483030	30
5054482836	5054482834	5054482832	5054482831	5054482830	28
5054482636	5054482634	5054482632	5054482631	5054482630	26
5054482436	5054482434	5054482432	5054482431	5054482430	24
5054482236	5054482234	5054482232	5054482231	5054482230	22
5054482036	5054482034	5054482032	5054482031	5054482030	20
5054481836	5054481834	5054481832	5054481831	5054481830	18
5054481636	5054481634	5054481632	5054481631	5054481630	16
5054481436	5054481434	5054481432	5054481431	5054481430	14
5054481236	5054481234	5054481232	5054481231	5054481230	12
5054481036	5054481034	5054481032	5054481031	5054481030	10
5054480836	5054480834	5054480832	5054480831	5054480830	8
発注番号 ORDER NUMBER					極数 CIRCUIT SIZE
梱包形態：エンボステープ梱包 PACKAGING STYLE : EMBOSSED TAPE AND REEL					

THIS DRAWING CONTAINS INFORMATION THAT IS PROPRIETARY TO MOLEX ELECTRONIC TECHNOLOGIES, LLC AND SHOULD NOT BE USED WITHOUT WRITTEN PERMISSION

DIMENSION UNITS	SCALE
mm	NTS

GENERAL TOLERANCES (UNLESS SPECIFIED)

ANGULAR TOL	±	3.0 °
4 PLACES	±	0.2
3 PLACES	±	0.2
2 PLACES	±	0.2
1 PLACE	±	0.2
0 PLACES	±	0.2

DRAFT WHERE APPLICABLE MUST REMAIN WITHIN DIMENSIONS

CURRENT REV DESC:

EC NO: 720259
DRWN: SOKUMURA01 2022/11/09
CHK'D: SAKIYAMA 2022/11/28
APPR: AIDA 2022/11/30

INITIAL REVISION:
DRWN: TAKAIKE 2019/08/21
APPR: AIDA 2019/12/26

molex

MICRO-LOCK PLUS 1.25 W/B
DUAL ROW RIGHT ANGLE SMT PLUG ASSEMBLY
GOLD PLATING

PRODUCT CUSTOMER DRAWING

DOCUMENT NUMBER	DOC TYPE	DOC PART	REVISION
5054480003-SD	PSD	000	C

THIRD ANGLE PROJECTION	DRAWING	SERIES	MATERIAL NUMBER	CUSTOMER	SHEET NUMBER
	A3-SIZE	505448	SEE CHART	GENERAL	4 OF 4

DOCUMENT STATUS	P1	RELEASE DATE	2022/11/30 05:04:04

FORMAT: master-tb-prod-A3
REVISION: J1
DATE: 2021/05/01