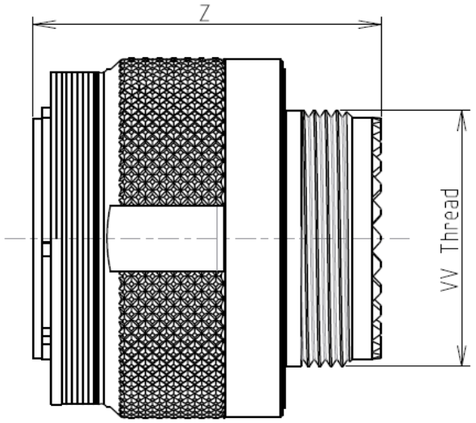

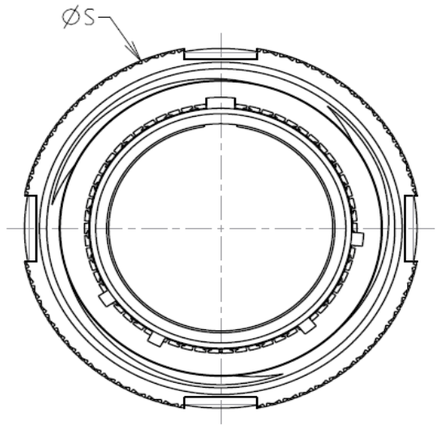

Keying Shown as example

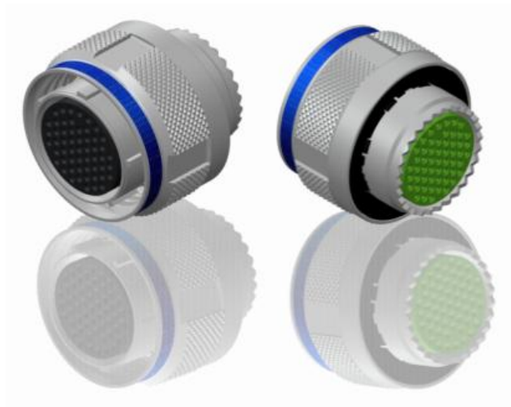

LAYOUT SHOWN AS EXAMPLE

CHARACTERISTICS

-Standard : Based on MIL-DTL-38999 Series III
-Shell Material : Stainless Steel
-Shell Plating : Nickel
-Insulator : Thermoplastic
-Contacts : Copper Alloy
-Seals & Grommet : Silicon Elastomer
-Contact Plating : Gold over copper Alloy 0.8µm minimum
-Durability : 500 Mating cycles
-Delivered with Souriau contacts and Accessories

-Temperature Range : -65°C to +200°C
-Salt Spray : 500 hours
-Mass : 79.43 g ± 10%

Connector dimension	
Dim	**Nominal**
ØS	35.7 Max
Z	31 Max
VV THREAD	M25x1-6g

SOURIAU shall not be liable for any non-conformity or damage due to a use of the Products which does not comply with the Specifications issued by either of the Parties or by a third party (professional recommendation, technical notice.)

Country	Jurisdiction & Control List
FR	Not Listed

PN: 8D517S26SE

A	17-10-2016	First Release	
ISS	DATE	Latest modification - by	MOD N°

Designed By: Date: **CUSTOMER DRAWING**

TITLE Stainless Steel Plug 8D series

SCALE NA | General linear Tolerances: ±-- | NPRDS / PROJECT **859**

SOURIAU WWW.SOURIAU.COM

This document is the property of SOURIAU it must not be reproduced or communicated without permission

FORMAT A3 | SOURIAU DRG N° 8D517S26SE-C | SHEET 1/2

BASIC SERIES:	8D	5	-	17	S	26	S	E

SHELL TYPE : Plug with RFI Shielding
CONTACT TYPE : Standard Crimp Contact
SHELL SIZE : 17
PLATING : S = Nickel
ORIENTATION : E
CONTACT TYPE : SOCKET(500 Matings)
CONTACT LAYOUT : 17-26

Contact Layout

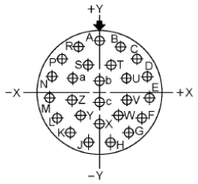

Contacts (Insert arrangement 17-26)					
Contact position ID	Contact location X-axis (mm)	Contact location Y-axis (mm)	Contact position ID	Contact location X-axis (mm)	Contact location Y-axis (mm)
A	+.000 (0.00)	+.321 (8.15)	P	-.239 (6.07)	+.214 (5.44)
B	+.131 (3.33)	+.293 (7.44)	R	-.131 (3.33)	+.293 (7.44)
C	+.239 (6.07)	+.214 (5.44)	S	-.070 (1.78)	+.177 (4.50)
D	+.305 (7.75)	+.099 (2.51)	T	+.070 (1.78)	+.177 (4.50)
E	+.319 (8.10)	-.034 (0.86)	U	+.175 (4.45)	+.094 (2.39)
F	+.278 (7.06)	-.161 (4.09)	V	+.178 (4.52)	-.036 (0.91)
G	+.189 (4.80)	-.260 (6.60)	W	+.119 (3.02)	-.151 (3.84)
H	+.067 (1.70)	-.314 (7.98)	X	+.000 (0.00)	-.203 (5.16)
J	-.067 (1.70)	-.314 (7.98)	Y	-.119 (3.02)	-.151 (3.84)
K	-.189 (4.80)	-.260 (6.60)	Z	-.178 (4.52)	-.036 (0.91)
L	-.278 (7.06)	-.161 (4.09)	a	-.175 (4.45)	+.094 (2.39)
M	-.319 (8.10)	-.034 (0.86)	b	+.000 (0.00)	+.065 (1.65)
N	-.305 (7.75)	+.099 (2.51)	c	+.000 (0.00)	-.065 (1.65)

Shell size	Arrangement no.	Number of contacts	Size contacts	Service rating	Contact position ID	Supersedes
17	-26	26	20	I	All	MS20053-26

SOURIAU shall not be liable for any non-conformity or damage
due to a use of the Products which does not comply with
the Specifications issued by either of the Parties or by a third party
(professional recommendation, technical notice.)

Country	Jurisdiction & Control List
FR	Not Listed

PN: 8D517S26SE

ISS	DATE	Latest modification - by	MOD N°
A	17-10-2016	First Release	

Designed By: Date: **CUSTOMER DRAWING**

TITLE Stainless Steel Plug 8D series

SCALE NA

General linear Tolerances: ±--

NPRDS / PROJECT **859**

SOURIAU

WWW.SOURIAU.COM

This document is the property of SOURIAU
it must not be reproduced or communicated without permission

FORMAT A3

SOURIAU DRG N° 8D517S26SE-C

SHEET 2/2