Alle Rechte vorbehalten/ *All rights reserved*

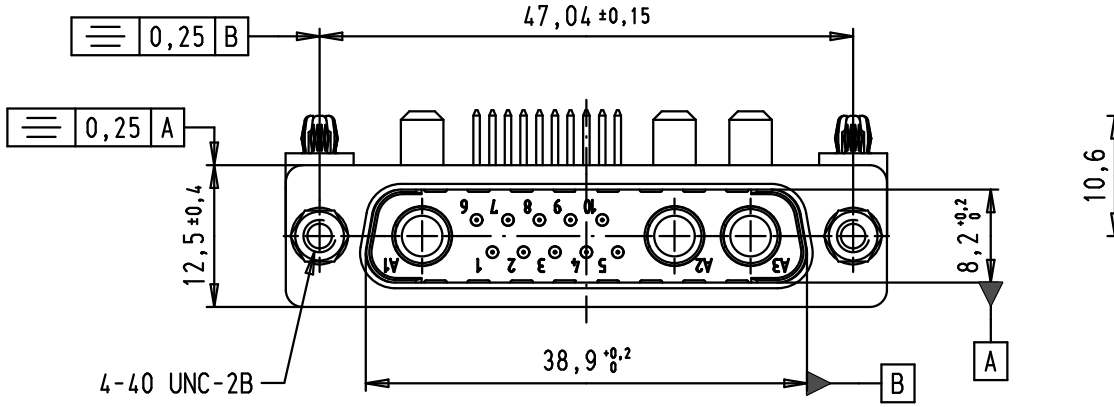

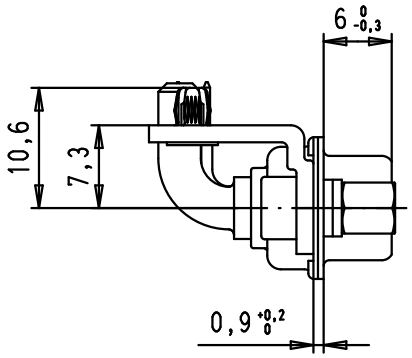

PCB layout, component side,
thickness 1,6 mm

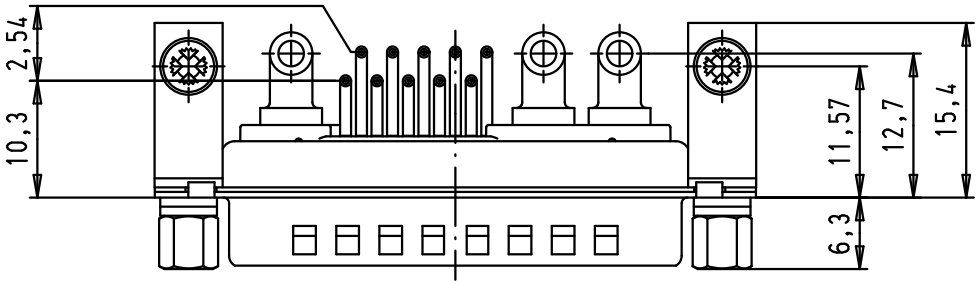

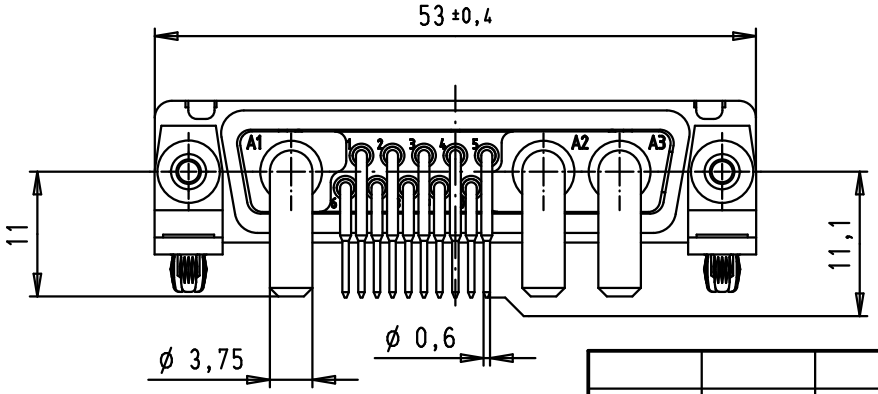

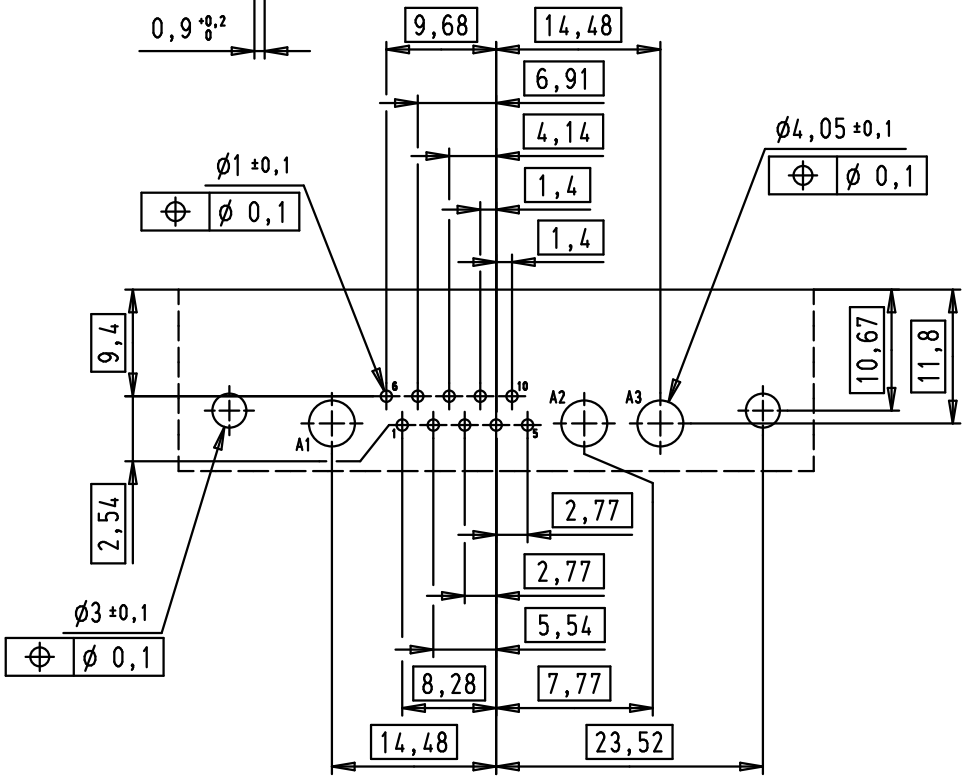

09 69 300 9173	0,76 µm Au
Part number	Performance level

34784	18/02/08	PK
Mod.	Dat.	Name

	Dat.	Name
Detail.	18/02/08	PK
Insp.		
Stand.		

All Dim. in mm
Orig. Size DIN A 4

D-Sub, 13W3, male, angled,
40A power contacts, solder pins,
tin plated shell with dimples,
clinch nuts and screw locks,
brackets with board locks

Maßstab/ *Scale* 1,5:1

HARTING EURL
F-95972 Paris

TB 09 69 300 9173

Sub.

Blatt/ *Page* 1/1