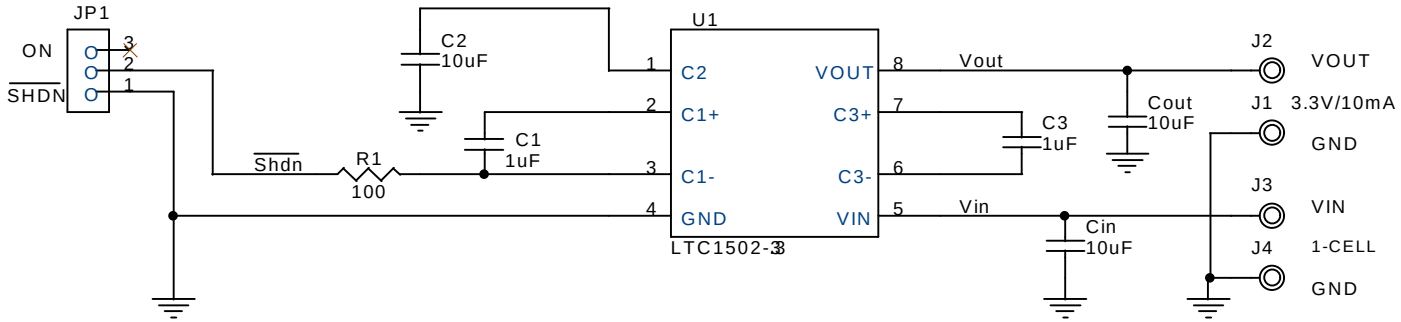

NOTES: ALL CAPACITORS 10V Y5V
ALL RESISTORS 1/16W 5%

Title	**Single Cell to 3.3V DC/DC Converter**	
Size A	Document Number DEMO DC239 LTC1502-3.3	Rev A
Date: Tuesday, March 16, 1999	Sheet 1 of 1	