molex

MX150 UL V0 RECEPTACLE 1X2 SEALED ASSEMBLY MAT SEAL
BOM AND PIN OUT SHEET

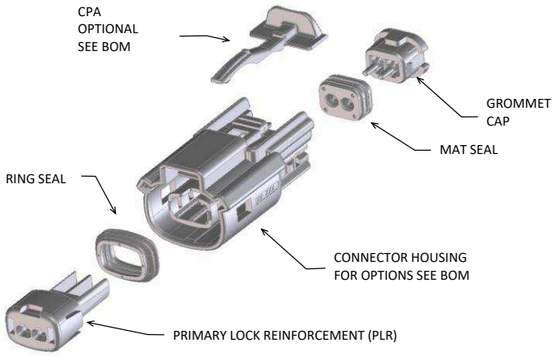

FOR ADDITIONAL INFORMATION SEE SD-33471-0001
OR E-33471-0001

ABBREVIATION	DESCRIPTION	COLOR	MATERIAL
A-BLK-UL	HOUSING, KEYING OPTION A (UL V0)	BLACK	PA6 GF30 V0
B-LG-UL	HOUSING, KEYING OPTION B (UL V0)	LIGHT GRAY	PA6 GF30 V0
C-DG-UL	HOUSING, KEYING OPTION C (UL V0)	DARK GRAY	PA6 GF30 V0
D-SG-UL	HOUSING, KEYING OPTION D (UL V0)	STONE GRAY	PA6 GF30 V0
GCP	GROMMET CAP (PLUGGED)	BLACK	SPS/NYLON GF20
GCO	GROMMET CAP (OPEN)	BLACK	SPS/NYLON GF20
PLR-UL	PLR (UL V0)	ASH GRAY	PA6 GF30 V0
CPA	CPA	RED	PBT GF20
M	MAT SEAL	ROYAL BLUE	INHERENTLY LUBRICATED SILICONE
R	RING SEAL	LIGHT BLUE	INHERENTLY LUBRICATED SILICONE

PART NUMBER	MODEL NUMBER	DRAWING NUMBER
160105-2501	EM-160105-2501	E-33491-0501
160105-2502	EM-160105-2502	E-33491-0501
160105-2503	EM-160105-2503	E-33491-0501
160105-2504	EM-160105-2504	E-33491-0501
33531-0201	EM-33531-021	E-33531-021
33531-0202 OR 33531-0201	EM-33531-022	E-33531-021
160105-2601	EM-33501-021	E-33501-0601
33611-0001	EM-33611-001	E-33611-001
33511-0201	EM-33511-021	E-33511-021
33521-0202	EM-33521-022	E-33521-001

ASSEMBLY DESCRIPTION	ASSEMBLY PART NUMBER	COMPONENT						BLOCKED TERMINALS										STATUS	COMMENTS	OPTIONAL ATTATCHMENTS SOLD SEPERATELY		MODEL NUMBER	MAY BE PRODUCED FROM SUB ASSEMBLY	
		THE PRESENCE OF AN ABBREVIATION INDICATES THE PRESENCE OF THAT COMPONENT.						CAVITY WITH A NUMBER INDICATES BLOCKED TERMINAL POSITION CAVITY WITHOUT A NUMBER INDICATES OPEN TERMINAL POSITION																
		HOUSING KEY/COLOR	GROMMET CAP	PLR	CPA	MAT SEAL	RING SEAL	1	2											BACKSHELL WITH RIBS	BACKSHELL WITHOUT RIBS			
UL V0 KEY A, BLACK, W/O CPA	160105-2001	A-BLK-UL	GCO	PLR-UL		M	R											SALEABLE		34949-0210	34949-0220	EM-160105-2001		
UL V0 KEY B, LIGHT GRAY, W/O CPA	160105-2002	B-LG-UL	GCO	PLR-UL		M	R											SALEABLE		34949-0210	34949-0220	EM-160105-2002		
UL V0 KEY C, DARK GRAY, W/O CPA	160105-2003	C-DG-UL	GCO	PLR-UL		M	R											SALEABLE		34949-0210	34949-0220	EM-160105-2003		
UL V0 KEY D, STONE GRAY, W/O CPA	160105-2004	D-SG-UL	GCO	PLR-UL		M	R											SALEABLE		34949-0210	34949-0220	EM-160105-2004		
UL V0 KEY A, BLACK, W/CPA	160105-2006	A-BLK-UL	GCO	PLR-UL	CPA	M	R											SALEABLE		34949-0210	34949-0220	EM-160105-2001		
UL V0 KEY B, LIGHT GRAY, W/CPA	160105-2007	B-LG-UL	GCO	PLR-UL	CPA	M	R											SALEABLE		34949-0210	34949-0220	EM-160105-2002		
UL V0 KEY C, DARK GRAY, W/CPA	160105-2008	C-DG-UL	GCO	PLR-UL	CPA	M	R											SALEABLE		34949-0210	34949-0220	EM-160105-2003		
UL V0 KEY D, STONE GRAY, W/CPA	160105-2009	D-SG-UL	GCO	PLR-UL	CPA	M	R											SALEABLE		34949-0210	34949-0220	EM-160105-2004		

molex

MX150 UL V0 RECEPTACLE 1X6 SEALED ASSEMBLY MAT SEAL
BOM AND PIN OUT SHEET

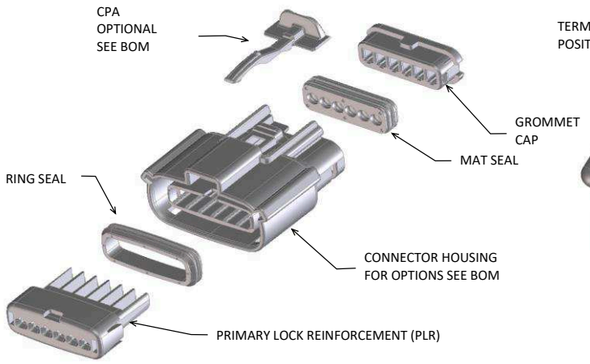

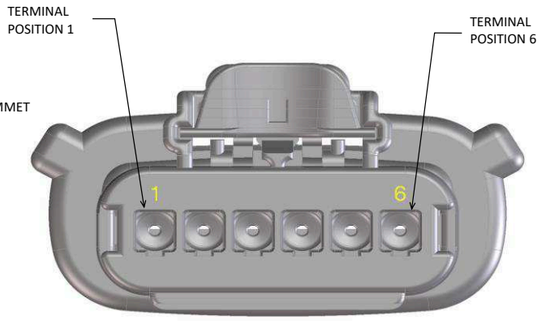

FOR ADDITIONAL INFORMATION SEE SD-33471-0001
OR E-33471-0001

ABBREVIATION	DESCRIPTION	COLOR	MATERIAL	PART NUMBER	MODEL NUMBER	DRAWING NUMBER
A-BLK-UL	HOUSING, KEYING OPTION A (UL V0)	BLACK	PA6 GF30 V0	160105-6501	EM-160105-6501	E-33491-0501
B-LG-UL	HOUSING, KEYING OPTION B (UL V0)	LIGHT GRAY	PA6 GF30 V0	160105-6502	EM-160105-6502	E-33491-0501
C-DG-UL	HOUSING, KEYING OPTION C (UL V0)	DARK GRAY	PA6 GF30 V0	160105-6503	EM-160105-6503	E-33491-0501
D-SG-UL	HOUSING, KEYING OPTION D (UL V0)	STONE GRAY	PA6 GF30 V0	160105-6504	EM-160105-6504	E-33491-0501
GCP	GROMMET CAP (PLUGGED)	BLACK	SPS/NYLON GF20	33531-0601	EM-33531-601	E-33531-061
GCO	GROMMET CAP (OPEN)	BLACK	SPS/NYLON GF20	33531-0606 OR 33531-0601	EM-33531-606	E-33531-061
PLR-UL	PLR (UL V0)	ASH GRAY	PA6 GF30 V0	160105-6601	EM-33501-061	E-33501-0601
CPA	CPA	RED	PBT GF20	33611-0001	EM-33611-001	E-33611-001
M 1	MAT SEAL	LIGHT BLUE	INHERENTLY LUBRICATED SILICONE	33511-0601	EM-33511-061	E-33511-061
M 2	MAT SEAL	ROYAL BLUE	INHERENTLY LUBRICATED SILICONE	33511-0604	EM-33511-061	E-33511-061
R	RING SEAL	RUST RED	INHERENTLY LUBRICATED SILICONE	33521-0602	EM-33521-062	E-33521-001

ASSEMBLY DESCRIPTION	ASSEMBLY PART NUMBER	COMPONENT						BLOCKED TERMINALS										STATUS	COMMENTS	OPTIONAL ATTATCHMENTS SOLD SEPERATELY		MODEL NUMBER	MAY BE PRODUCED FROM SUB ASSEMBLY	
		THE PRESENCE OF AN ABBREVIATION INDICATES THE PRESENCE OF THAT COMPONENT.						CAVITY WITH A NUMBER INDICATES BLOCKED TERMINAL POSITION CAVITY WITHOUT A NUMBER INDICATES OPEN TERMINAL POSITION																
		HOUSING KEY/COLOR	GROMMET CAP	PLR	CPA	MAT SEAL	RING SEAL	1	2	3	4	5	6							BACKSHELL WITH RIBS	BACKSHELL WITHOUT RIBS			
UL V0 KEY A, BLACK, W/O CPA	160105-6001	A-BLK-UL	GCO	PLR-UL		M 2	R											OK TO TOOL				EM-160105-6001		
UL V0 KEY B, LIGHT GRAY, W/O CPA	160105-6002	B-LG-UL	GCO	PLR-UL		M 2	R											OK TO TOOL				EM-160105-6002		
UL V0 KEY C, DARK GRAY, W/O CPA	160105-6003	C-DG-UL	GCO	PLR-UL		M 2	R											OK TO TOOL				EM-160105-6003		
UL V0 KEY D, STONE GRAY, W/O CPA	160105-6004	D-SG-UL	GCO	PLR-UL		M 2	R											OK TO TOOL				EM-160105-6004		
UL V0 KEY A, BLACK, W/CPA	160105-6006	A-BLK-UL	GCO	PLR-UL	CPA	M 2	R											OK TO TOOL				EM-160105-6001		
UL V0 KEY B, LIGHT GRAY, W/CPA	160105-6007	B-LG-UL	GCO	PLR-UL	CPA	M 2	R											OK TO TOOL				EM-160105-6002		
UL V0 KEY C, DARK GRAY, W/CPA	160105-6008	C-DG-UL	GCO	PLR-UL	CPA	M 2	R											OK TO TOOL				EM-160105-6003		
UL V0 KEY D, STONE GRAY, W/CPA	160105-6009	D-SG-UL	GCO	PLR-UL	CPA	M 2	R											OK TO TOOL				EM-160105-6004		

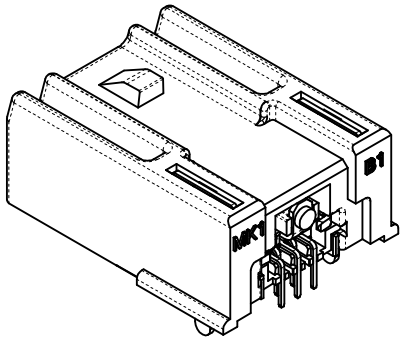

ISOMETRIC VIEW

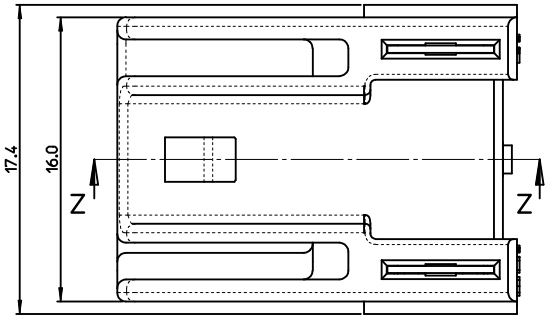

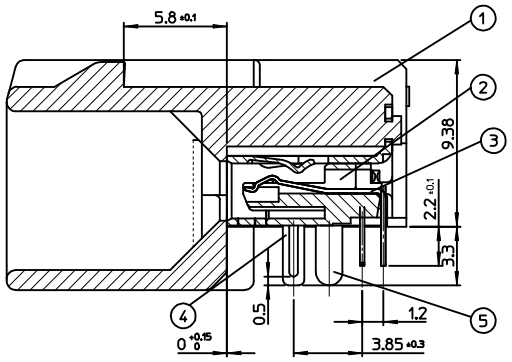

SECTION Z-Z

<PART LIST>

NO.	PART NAME	MATERIALS
1	SHROUD	LCP, glass-filled, UL94 V-0
2	REC. HOUSING	LCP, glass-filled, UL94 V-0
3	TERMINAL	COPPER ALLOY
4	SHIELD CASE	PHOSPHOR BRONZE
5	FITTING NAIL	BRASS

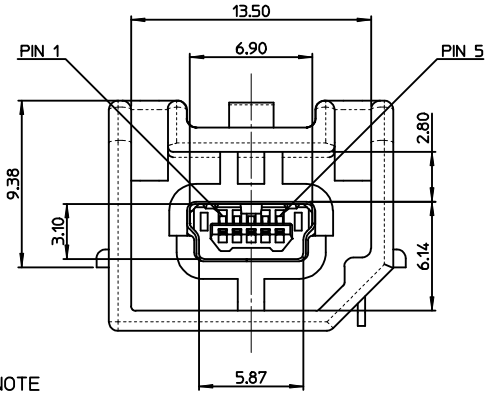

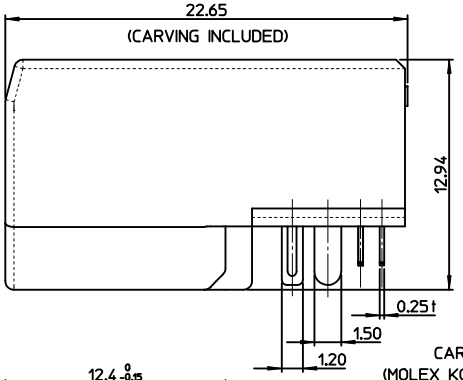

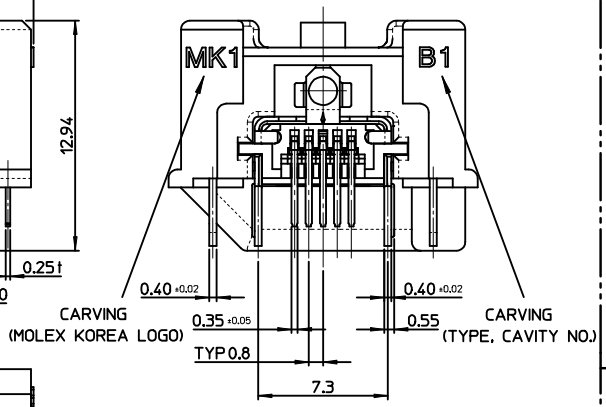

RECOMMENDED PCB LAYOUT
- TYPE 'B'
(TOP VIEW , COMPONENT SIDE) A1

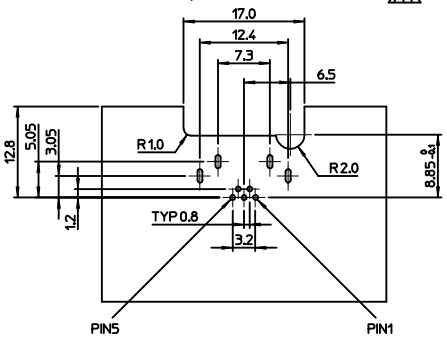

(BOTTOM VIEW , SOLDER SIDE)

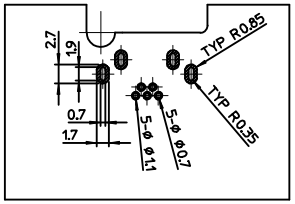

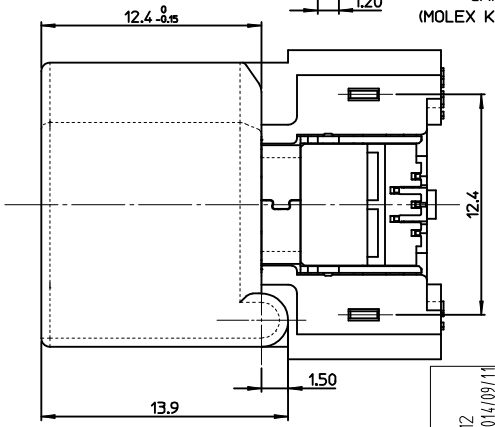

NOTE
1. MATES WITH :
   (MOLEX SERIES NO. - 111014, 111015, 111005, 111041, 111019, 111020)
2. SHROUD GEOMETRY AND ASSEMBLY WITH USB MINI-B CONNECTOR ARE ACCORDING TO USCAR STD 999-U-USB-Z01
3. FINISHES
   - TERMINAL :
     CONTACT AREA : GOLD 0.75μm MIN.
     SOLDER TAIL AREA : TIN 3.8μm MIN.
     UNDER PLATING : NI 1.25μm MIN.
   - SHIELD CASE :
     3.0μm MIN. TIN OVER NI 1.0μm MIN.
   - FITTING NAIL :
     3.0μm MIN. TIN OVER NI 1.0μm MIN.
4. UNLESS OTHERWISE SPECIFIED, TYPICAL RECOMMENDED PCB MANUFACTURING TOLERANCE IS ±0.05
5. PACKAGING IS TRAY :
   (48 PCS/TRAY, 5 TRAY/TRAY BOX, 240 PCS/TRAY BOX, 960 PCS/CARTON BOX)
6. PRODUCT SPECIFICATION : PS-49616-001
7. PACKAGING INFORMATION : PK-49616-001
8. PCB THICKNESS : 1.6mm(REFERENCE)

<TABLE 1>

MATERIAL NO.	ORDER NO.	COLOR	PACKING
496160105	49616-0105	GRAY	TRAY

REVISED
EC NO: KTR2015-0012 2014/09/11
DRWN:YIBAEK
CHKD:
APPR: JYCHOI 2014/09/11
DESCRIPTION
REV A1

QUALITY SYMBOLS
▼=0
▽=0

GENERAL TOLERANCES (UNLESS SPECIFIED)

	mm	INCH
4 PLACES	± ---	± ---
3 PLACES	± ---	± ---
2 PLACES	± 0.15	± ---
1 PLACE	± 0.25	± ---
ANGULAR ± 3 °		

DRAFT WHERE APPLICABLE MUST REMAIN WITHIN DIMENSIONS

DIMENSION STYLE: MM ONLY
SCALE
DESIGN UNITS: METRIC
THIRD ANGLE PROJECTION

DRAWN BY: YIBAEK DATE: 2014/08/27
CHECKED BY DATE
APPROVED BY: JYCHOI DATE: 2014/09/04
MATERIAL NO.: SEE TABLE1

TITLE
HSAUTOLINK R/A
HEADER TYPE-B
(SOLDER TAIL=2.2MM)

molex MOLEX INCORPORATED

DOCUMENT NO.: SD-49616-004
SHEET NO.: 1 OF 1

SIZE A2

THIS DRAWING CONTAINS INFORMATION THAT IS PROPRIETARY TO MOLEX INCORPORATED AND SHOULD NOT BE USED WITHOUT WRITTEN PERMISSION