ISL Products International

ø59mm Worm Gear Motor
Right Side Gearbox
MOT-I-81557-102

Online ID#: ***WGM-59-24-220-R***

Our Worm Gear Motors are an excellent automation solution providing right angle output with self-braking technology. They are equiped to handle varying loads and are best for intermittent duty operation. With endless performance combinations, we have the gear motor for your next application.

Contact Us for alternative solutions!

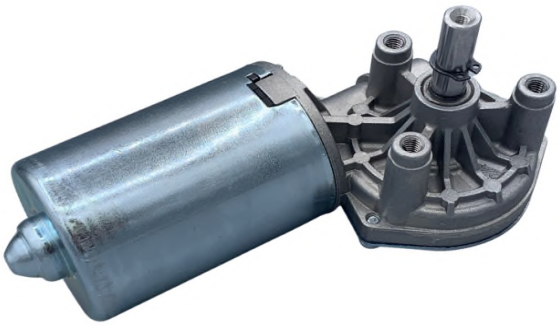

Specifications

Gearhead Type:	Worm - Right side		**No-Load Speed:**	220 rpm *(+/- 10%)*
Motor Type:	Carbon - Brushed		**No-Load Current:**	< 1.5 A
Rated Voltage:	24V DC		**Stall Torque:**	214 kg.cm
Rated Speed:	181 rpm		**Max. Power:**	120 W
Rated Torque:	38 kg.cm		**Termination Style:**	Connector: AMP 180907-0

Dimensions

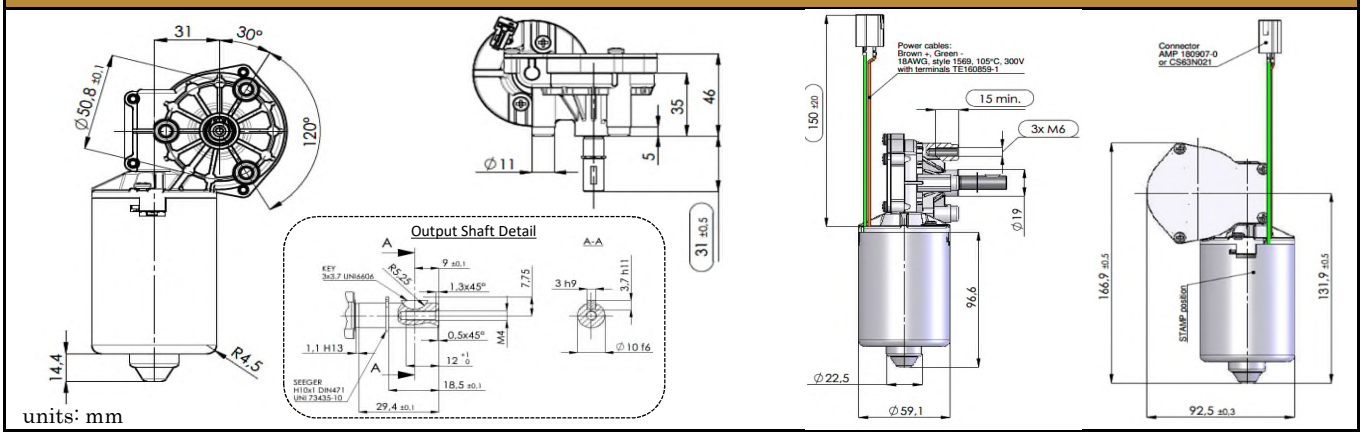

Performance Curve

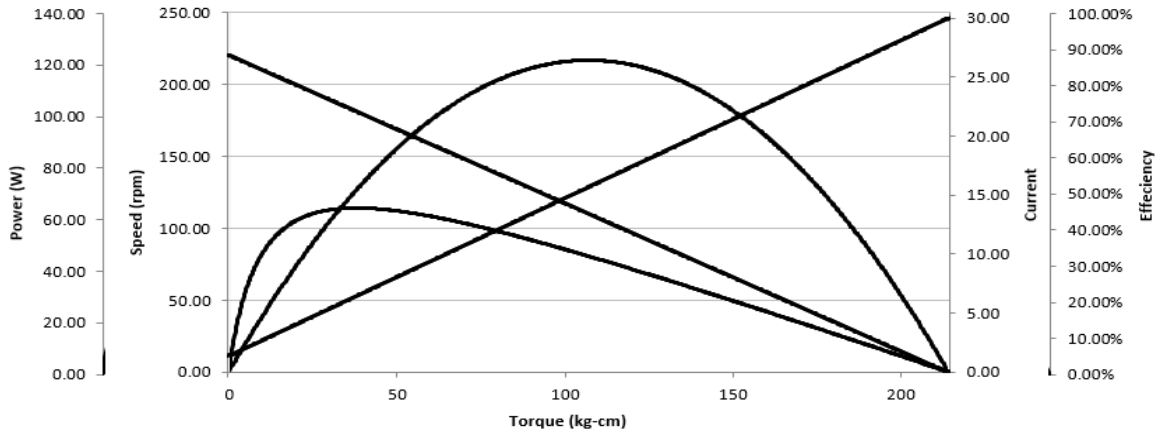

© 2023 ISL Products International Ltd. Specifications subject to change without notice.