FA-1010D3-C

Shock Absorber - Fixed

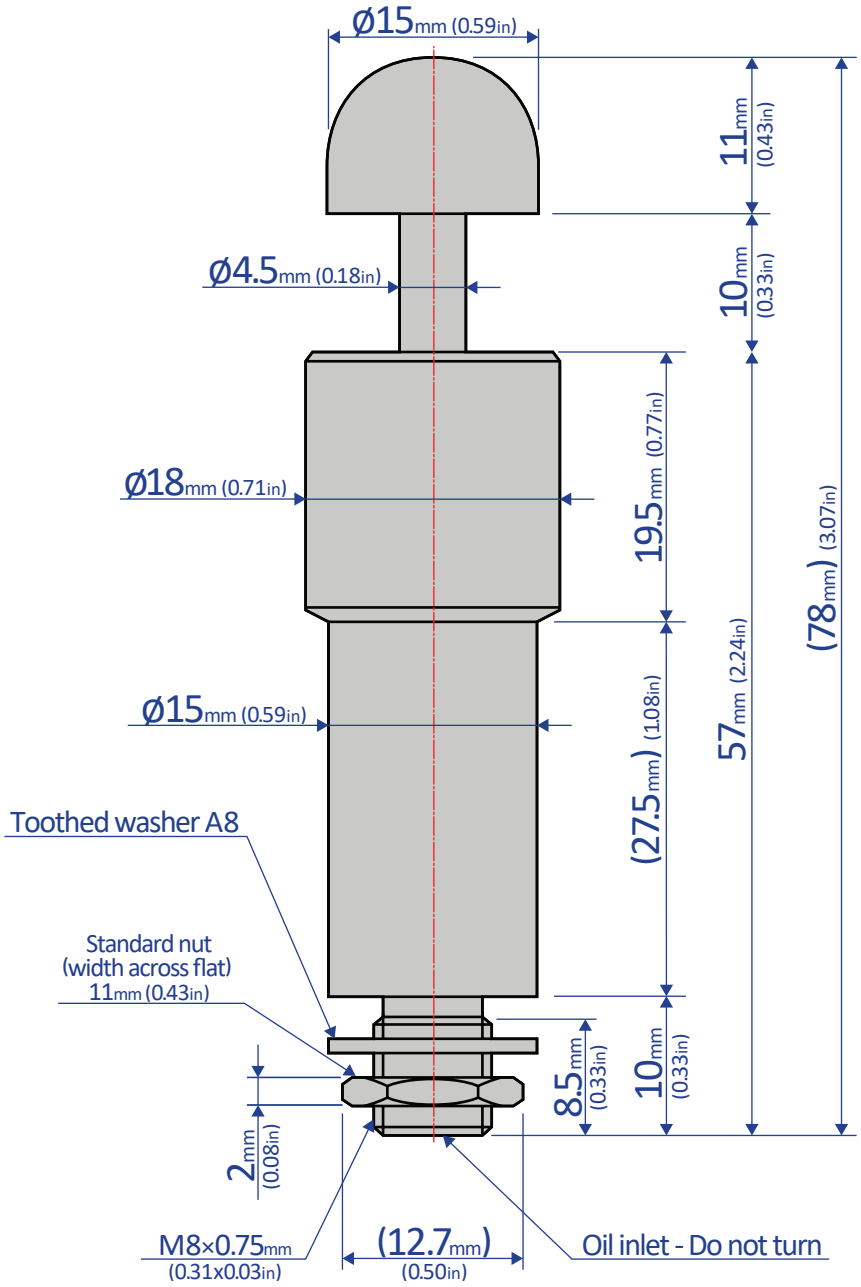

Bansbach easylift®

50 West Drive • Melbourne, Florida 32904

(321) 253-1999 • www.easylift.com • www.damper.net