Part Number: 0623000800
Status: Active
Description: Mini-Cam IV Discrete Wire Termination Machine

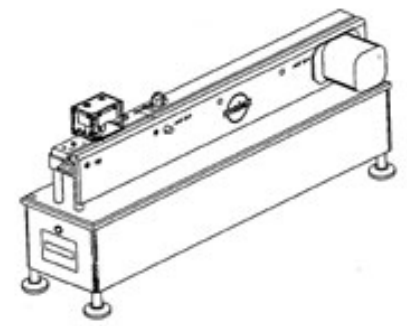

Series image - Reference only

Documents:
RoHS Certificate of Compliance (PDF)

General

Product Family	Application Tooling
Series	T9999
Comments	See Tooling Specification (PDF) Above
Function	Wire Stripping
Geographic Area	Global
Level of Automation	Automatic
More Detailed Tech Information	applicationtooling@molex.com
Product Name	PremiumGrade™
Tool Type	Terminator
UPC	800753889378
Warranty Disclaimer	CAUTION: Molex tooling crimp specifications are valid only when used with Molex terminals and tooling manufactured by Molex and sold by Molex or authorized distributors ("Molex Tooling"). When using tooling other than Molex Tooling with Molex specific connector systems listed in our ATS documents, the Molex tooling qualification does not apply and the responsibility for full qualification of the connector system is that of the customer. Molex accepts no liability for connector performance or tooling support where tooling other than Molex Tooling is used or where Molex Tooling is modified.

Material Info

Reference - Drawing Numbers

Application Tooling Documents	ATS-623000898

EU ELV
Not Reviewed

EU RoHS
Not Reviewed

China RoHS

REACH SVHC
Not Reviewed

Halogen-Free Status
Not Reviewed

Need more information on product environmental compliance?

Email productcompliance@molex.com
Please visit the Contact Us section for any non-product compliance questions.

China ROHS	Not Reviewed
ELV	Not Reviewed
RoHS Phthalates	Not Reviewed

Search Parts in this Series
T9999 Series

Use With
KK Connectors 7241