PART NO. 1230

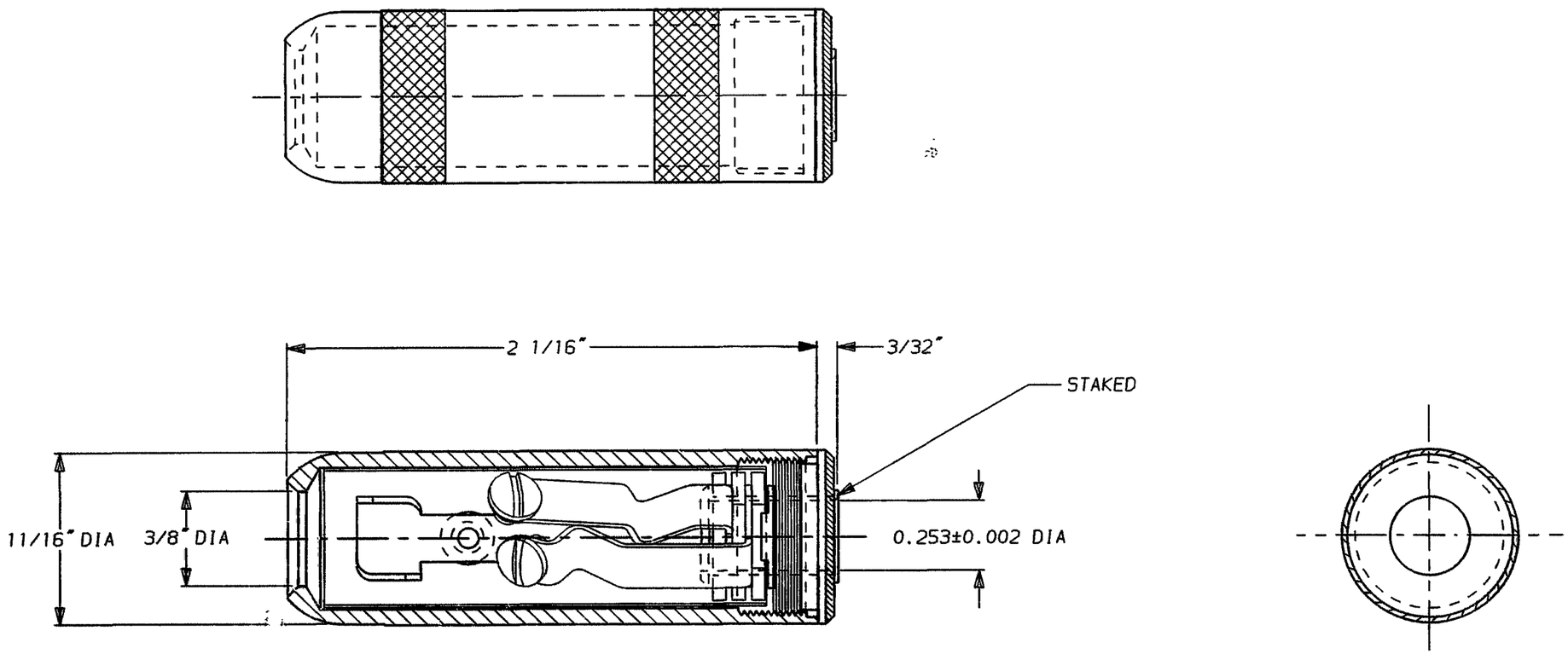

CUSTOMER DRAWING

CAD/CAM DWG. NO.
1230.CD

SHEET 1 OF 1

SPECIFICATIONS:

1. BODY AND HANDLE - BRASS-NICKEL PLATED
2. TIP SPRING - NICKEL SILVER-SPRING TEMPERED
3. INSULATORS - BAKELITE
4. HANDLE INSULATORS - GRAY FIBRE
5. SLEEVE TERMINAL - HOT TINNED

ISSUE	CHANGE NO.	DATE	BY	APP'D
C	CAD REDRAW WAS REV B ECO #20555	3-26-97	OM	JJ

REVISIONS

☆ STAR SYMBOL DENOTES CRITICAL DIMENSION, SEE S/C ENGINEERING STANDARD ES-0001

UNLESS OTHERWISE SPECIFIED

1. ALL DIMENSIONS IN INCHES
   TWO PLACE DECIMAL ±.01
   THREE PLACE DECIMAL ±.005
   FRACTIONAL DIMENSIONS ±1/64
   ANGLES ±1/2°
   ALL DIA'S CONCENTRIC WITHIN .005 T.I.R.
2. REMOVE ALL BURRS
3. MAKE NO DIMENSIONAL ALLOWANCES FOR APPLIED FINISHES, I.E., PLATING, PAINTING, ETC.
4. HOLES ON THE SAME CENTERLINE MUST BE ALIGNED WITHIN ±.002

DO NOT SCALE DRAWING

THIS DRAWING DESCRIBES A DESIGN CONSIDERED PROPRIETARY IN NATURE, DEVELOPED AND MANUFACTURED BY SWITCHCRAFT INC. AND IS RELEASED ON A CONFIDENTIAL BASIS FOR IDENTIFICATION PURPOSE ONLY.

SIZE	WIDTH	MULT	LBS./M	TEMPER
.	.	.	.	.

FINISH . SPEC. NO. .

MATERIAL . SPEC. NO. .

FIRST USED ON . SCALE 2:1

DATE DRAWN	BY	CHK'D	APP'D
3-24-55	MA	LD 3-30-55	LD 3-30-55

Switchcraft®

NAME EXTENSION JACK 3 COND. SCREW TERM.

PART NO. 1230

ISSUE C

B ROUTING 146