ITEM NO.	PART NUMBER	DESCRIPTION	QTY.	COMPONENT NOTES
1	50-00993	Connector, 8 pin M12 X-code plug, 12xL38.6mm, gold plated, molding style, solder cup, IP67, shielded	1	
2	30-01714	Wire, 4PR BC, 26 AWG, CAT6a SF/UTP, UL20387, 300V, 105C, 60C oil, UV, 7.2 mm, shielded, VW-1, PVC	1	
3	24-00363	Overmold, M12 X-code plug and jack, 180°	1	PVC, black, 60 °C oil and UV resistant

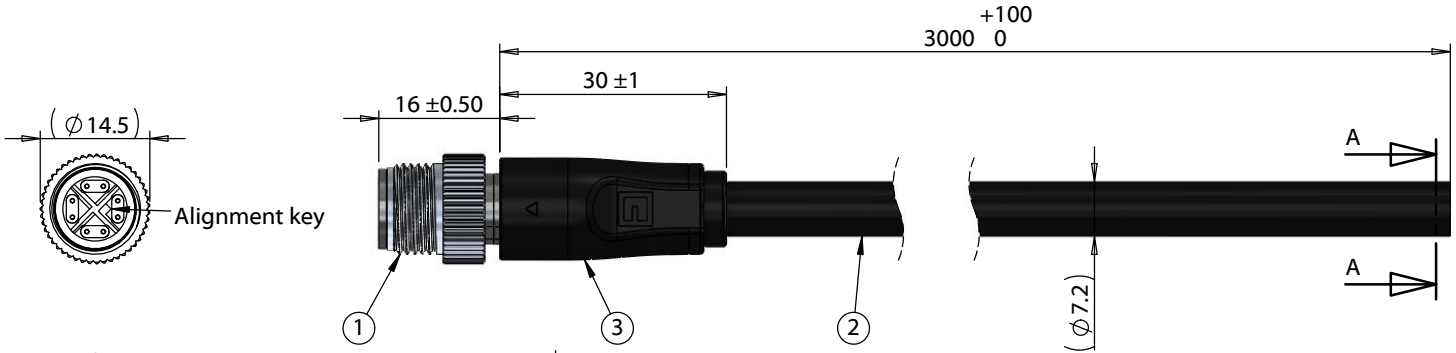

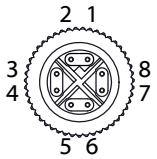

Front View
Not to Scale

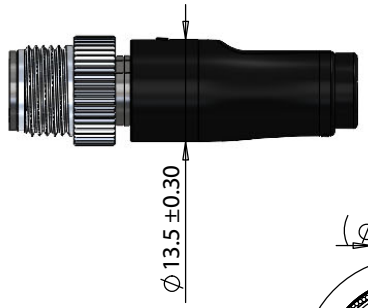

Notes:
Cable rated for 48 V, 0.5 A
Temperature: -40 ~ 105 °C

Wire:
Oil resistant up to 60 °C
Water resistant up to 75 °C
UV resistant
CAT6a rated

IP67 waterproof rating when M12 connector mated with corresponding (IP67) M12 connector

Functionally equivalent components may be substituted

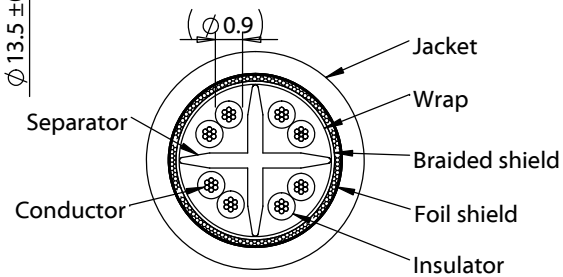

SECTION A-A
SCALE 4 : 1

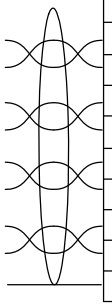

Wiring Diagram	
50-00993	wire color
1	orange/white
2	orange
3	green/white
4	green
5	brown/white
6	brown
7	blue/white
8	blue
Shell	shield

Revision:	Date:	Description:
A	5/19/2022	Initial release

Prepared: JD Digitally signed by JD Date: 2022.05.19 15:32:43 -07'00'

Verified: PB Digitally signed by PB Date: 2022.05.20 10:00:26 -07'00'

Dimensions are in millimeters.
Tolerances:
X: ± 0.5 mm
X.X: ± 0.3 mm
X.XX: ± 0.3 mm

Notes:

RoHS compliant

Function test: no open, no short circuit, no intermittent

Description:
Cable, 3000 mm, 8 pin 50-00993 M12 X-code plug to blunt cut, CAT6a, 26 AWG, 30-01714 wire

TENSILITY
tel 1.541.323.3228 800 877.670.7118
fax 1.541.323.4202 web tensility.com

Size: A
Part number: 10-03983
Scale: 1:1
Sheet 1 of 1

5 4 3 2 1

To see a custom version of this cable assembly, call Tensility at 541-323-3228 or email engineering@tensility.com