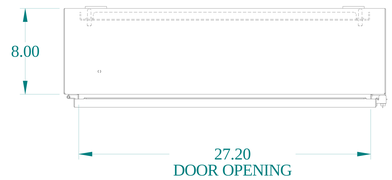


TOP VIEW

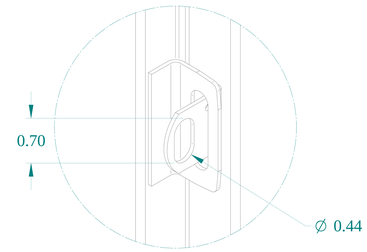


DETAIL Z

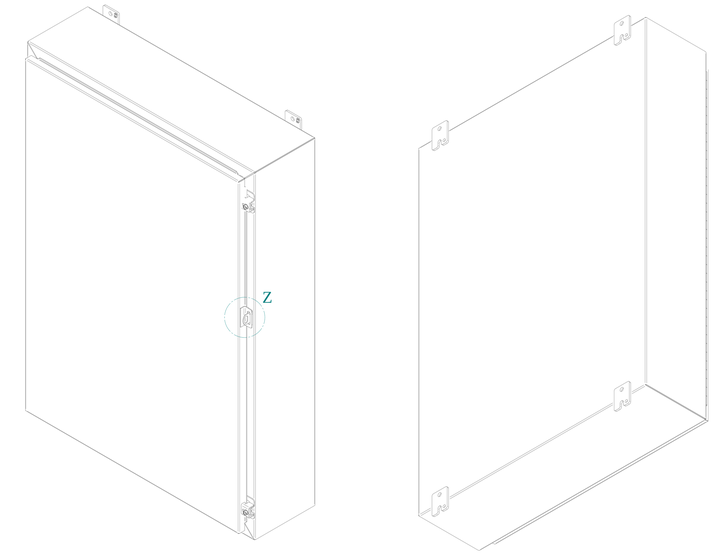


ISOMETRIC VIEWS

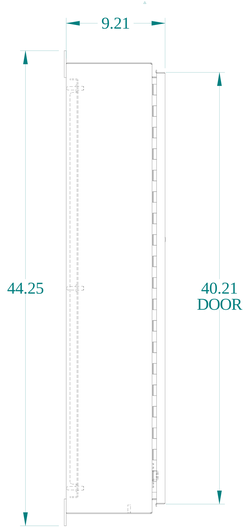


SIDE VIEW

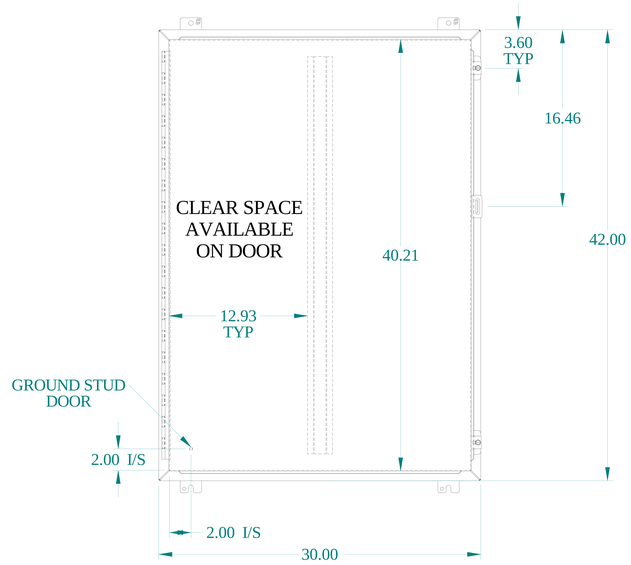


FRONT VIEW

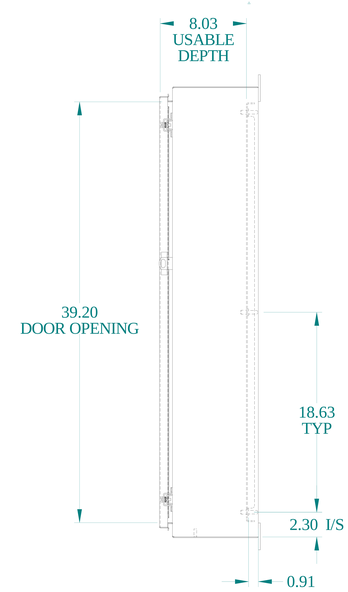


SIDE VIEW

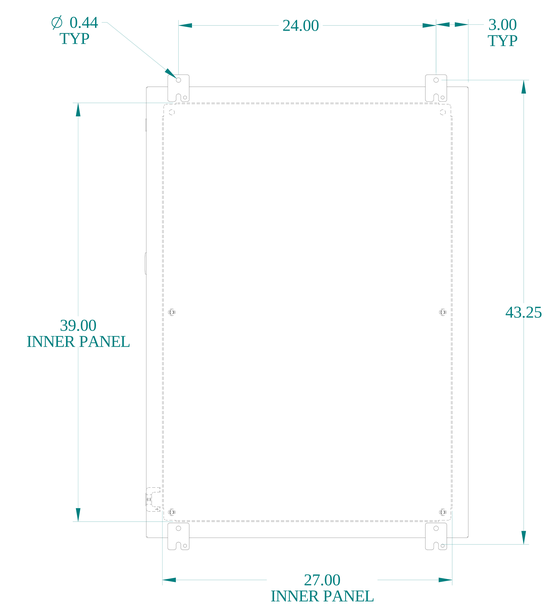


BACK VIEW

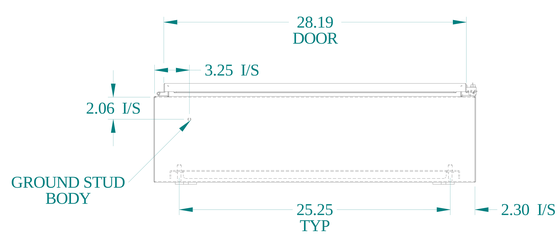


BOTTOM VIEW

HAMMOND MANUFACTURING®

www.hammondmfg.com

Data subject to change without notice.

| | |
|---|---|
| Part # : 1418O8 | Date : Apr. 12, 2019 |

Link:www.hammfg.com/1418O8