THIS DRAWING IS UNPUBLISHED. RELEASED FOR PUBLICATION 20
© COPYRIGHT2016 BY TE ALL RIGHTS RESERVED.

REVISIONS					
F	LTR	DESCRIPTION	DATE	DWN	APVD
	B	X-1802106-X UPDATED	20FEB2017	NS	UT
	B1	ADD SERIAL VERSION	27NOV2017	NS	XR
	B2	ADD CODING D,E AND REF WITH CPA	03SEP2018	NS	XR
	C	UPDATE MATERIAL PN 1802107	14DEC2018	NS	XR

Kodierung nach TE Schnittstellenzeichnung 208-18013 / CODINGS ACC. TE INTERFACE DRW. 208-18013

Kodierung A / CODE A | Kodierung B / CODE B | Kodierung C / CODE C | Kodierung D / CODE D (B2) | Kodierung E / CODE E (B2) | Kodierung J / CODE J | Kodierung Z / CODE Z

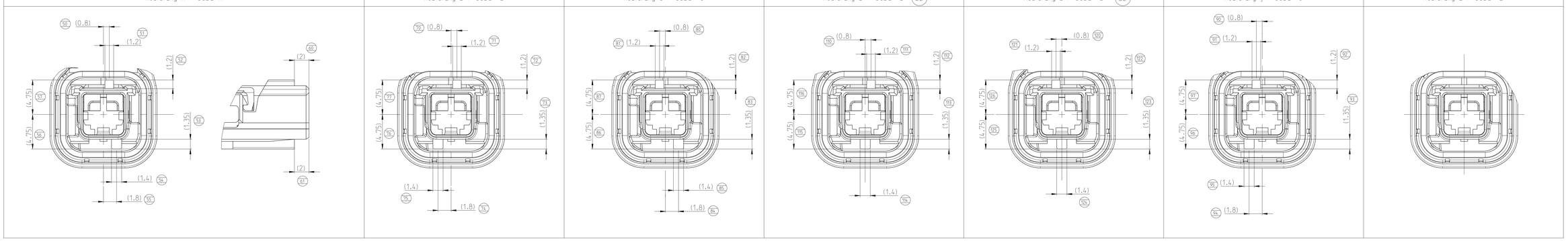

MATENET ASSY REC HSG mit IP Schutzkappe (Klappe des Inner HSG geschlossen)
MATENET ASSY REC HSG with IP PROT. COVER (FLAP of INNER HSG closed)

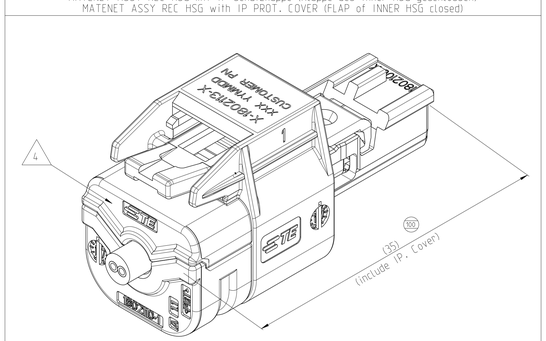

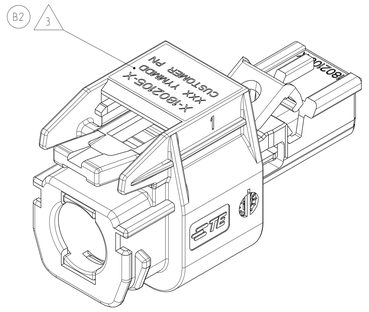

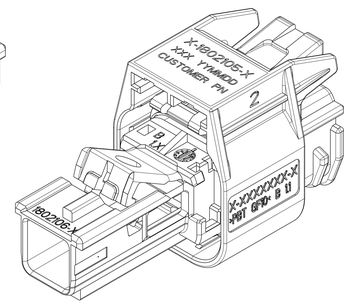

A-A

1802105-1	AS SHOWN	

3:1

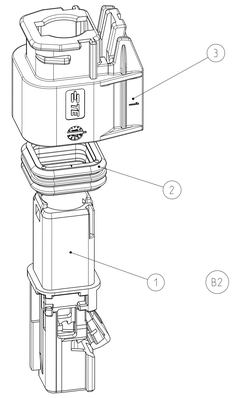

Notizen / NOTES

1 Passend zu Stiftwanne nach TE-Schnittstellenzeichnung 208-18013
MATING TO PINHEADER ACC. TE-INTERFACE DRAWING 208-18013

2 Kammer fuer MATEnet 2Pos. NanoMQS female Insert module TE PN 0-2302450-X
CAVITY FOR MATEnet 2Pos. NanoMQS FEMALE INSERT MODULE TE PN 0-2302450-X

B2 3 Bereich zum Bedrucken:
- TE PN
- Fertigungsdatum (YYMMDD)
- Fertigungsstandort Code nach TE-Spez. TEC-115-24
- Kunden PN
AREA FOR PRINTING:
- TE PN
- PRODUCTION DATE (YYMMDD)
- MANUFACTURING LOCATION CODE PER TE-SPEC. TEC-115-24
- CUSTOMER PN

4 Passendes IP PROT. COVER 1802110
SUITABLE IP PROT. COVER 1802110

5 Passende Kabeldichtung 1802112
SUITABLE WIRE SEAL 1802112

6 Anlieferzustand: 2. Kontaktsicherung geoeffnet
DELIVERY CONDITION: RETAINER IN OPEN POSITION

7 Verpackung: Schuettgut im Beutel im Karton
PACKAGING: LOOSE PIECES IN BAG IN BOX

8 Kontaktkammernummer
CONTACT CAVITY NUMBER

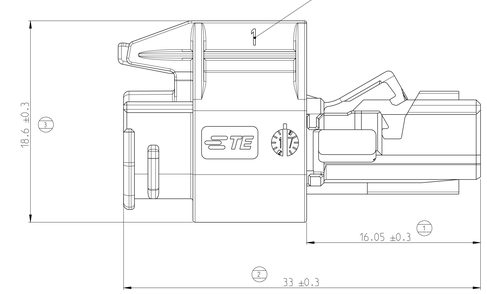

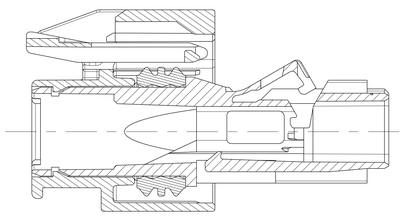

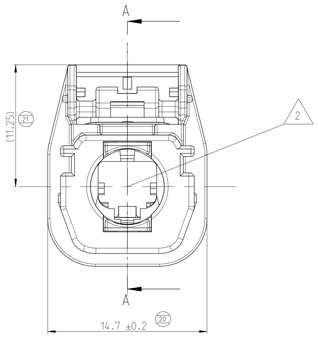

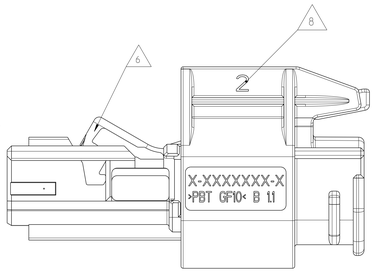

1802105-1 WITH CPA AS SHOWN

MATENET ASSY REC HSG mit CPA offen und Klappe des Inner HSG geschlossen
MATENET ASSY REC HSG with CPA Unlocked and FLAP of INNER HSG closed

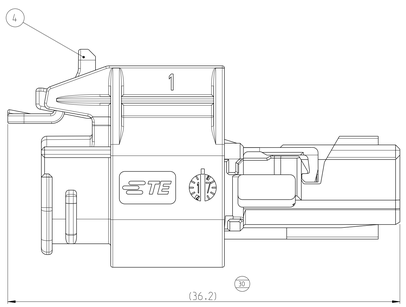

MATENET ASSY REC HSG mit CPA verriegelt und Klappe des Inner HSG geschlossen
MATENET ASSY REC HSG with CPA Locked and FLAP of INNER HSG closed

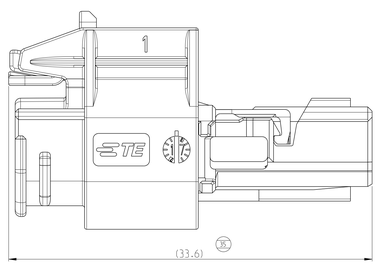

SEALED COMPONENT

							REC HSG ASSY-MATEnet Sealed 1-Port							REC HSG ASSY-MATEnet Sealed 1-Port with CPA (B2)							
							A	B	C	D	E	J	Z	A	B	C	D	E	J	Z	CODING
							1802105-1	1802105-2	1802105-3	1802105-4	1802105-5	1802105-7	1802105-9	2-1802105-1	2-1802105-2	2-1802105-3	2-1802105-4	2-1802105-5	2-1802105-7	2-1802105-9	
	4	1	-	CPA	PA46-GF15	Red 3003	0.202									X					
	3	1	-	SEAL PROTECTION COVER MATEnet Sealed 1-Port	PBT-GF10 (C)	black 9011	1.29			X						X					
	2	1	-	RADIAL SEAL MATEnet Sealed 1-Port	LSR	Green 6010	0.232			X						X					
	1	1	Z	Inner HSG. Code Z MATEnet Sealed 1-Port	PBT-GF10	water-blue 5021	1						X							X	
	1	1	J	Inner HSG. Code J MATEnet Sealed 1-Port		beige 1001						X							X		
B2	1	1	E	Inner HSG. Code E MATEnet Sealed 1-Port		green 6002					X							X			
B2	1	1	D	Inner HSG. Code D MATEnet Sealed 1-Port		violet 4004				X							X				
	1	1	C	Inner HSG. Code C MATEnet Sealed 1-Port		blue 5012			X							X					
	1	1	B	Inner HSG. Code B MATEnet Sealed 1-Port		white 9010		X							X						
	1	1	A	Inner HSG. Code A MATEnet Sealed 1-Port		black 9011	X							X							
	ITEM	QTY	CODE	DESCRIPTION	MATERIAL	COLOR	WEIGHT [g]	TE PART NUMBER													

FOR SERIE C-SAMPLE ONLY
NUR FUER C-MUSTER

THIS DRAWING IS A CONTROLLED DOCUMENT.	DWN N.SIMON 16SEP2016	TE Connectivity	
DIMENSIONS: mm	CHK X.ROUILLARD 16SEP2016	NAME REC HSG ASSY MATEnet Sealed 1-Port	
TOLERANCES UNLESS OTHERWISE SPECIFIED: 0 PLC ±0.2, 1 PLC ±0.1, 2 PLC ±0.05, 3 PLC ±, 4 PLC ±, ANGLES ±°	APVD C.SCHREITLINGER 16SEP2016		
	PRODUCT SPEC –		
	APPLICATION SPEC 114-94431		
MATERIAL –	WEIGHT 2.6gr	SIZE A0 / CAGE CODE 00779 / DRAWING NO C-1802105	RESTRICTED TO –
FINISH –	CUSTOMER DRAWING	SCALE 5:1 / SHEET 1 OF 2	REV C

4806 (3/13)

THIS DRAWING IS UNPUBLISHED. RELEASED FOR PUBLICATION 20
© COPYRIGHT 2016 BY TE ALL RIGHTS RESERVED.

REVISIONS					
P	LTR	DESCRIPTION	DATE	DWN	APVD
	-	SEE SHEET 1	-	-	-

Kodierung nach TE Schnittstellenzeichnung 208-18013 / CODINGS ACC. TE INTERFACE DRW. 208-18013

Kodierung A / CODE A

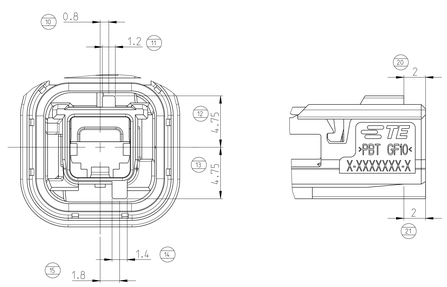

Kodierung B / CODE B

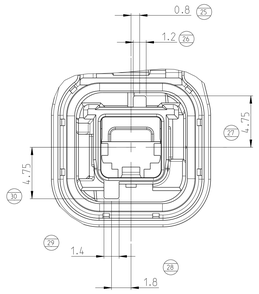

Kodierung C / CODE C

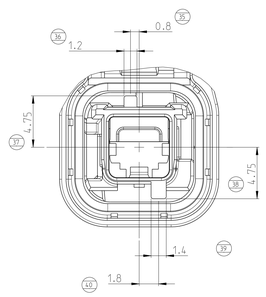

Kodierung j / CODE J

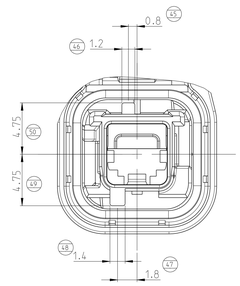

Kodierung Z / CODE Z

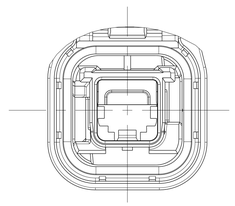

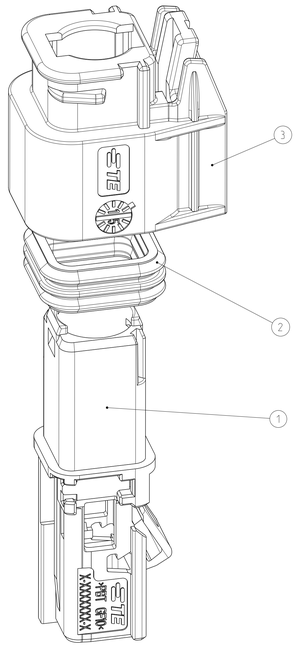

MATENET ASSY REC HSG mit IP Schutzkappe (Klappe des Inner HSG geschlossen)
MATENET ASSY REC HSG with IP PROT. COVER (FLAP of INNER HSG closed)

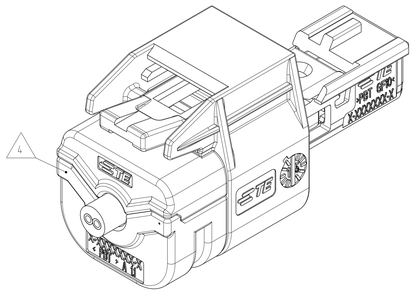

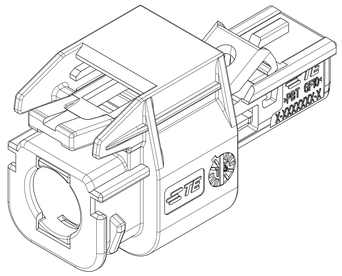

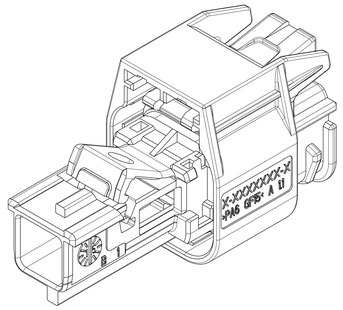

A-A

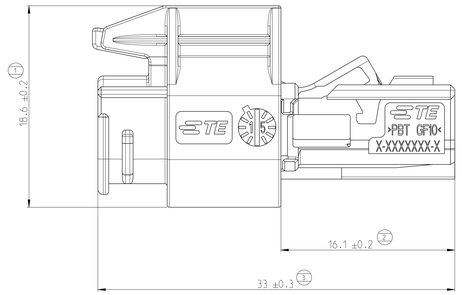

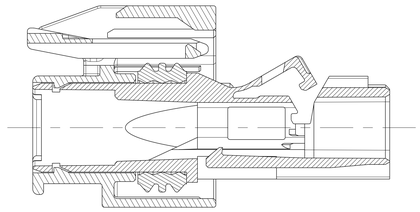

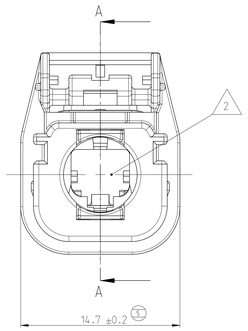

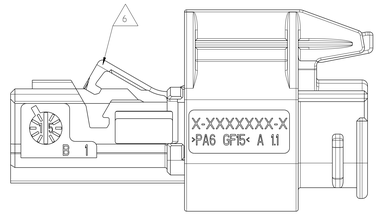

Notizen / NOTES

1 Passend zu Stiftwanne nach TE-Schnittstellenzeichnung 208-18013
MATING TO PINHEADER ACC. TE-INTERFACE DRAWING 208-18013

2 Kammer fuer MATEnet 2Pos. NanoMQS female Insert module TE PN 9-2302450-X
CAVITY FOR MATEnet 2Pos. NanoMQS FEMALE INSERT MODULE TE PN 9-2302450-X

3 Bereich zum Bedrucken, TE PN, Produktionsdatum, Kunden PN
AREA FOR PRINTING, TE PN, DATE CODE, CUSTOMER PN

4 Passendes IP PROT. COVER 1802110
SUITABLE IP PROT. COVER 1802110

5 Passende Kabeldichtung 1802112
SUITABLE WIRE SEAL 1802112

6 Anlieferzustand: 2. Kontaktsicherung geoeffnet
DELIVERY CONDITION: RETAINER IN OPEN POSITION

7 Verpackung: Schuettguf im Beutel im Karton
PACKAGING: LOOSE PIECES IN BAG IN BOX

8-1802105-1 AS SHOWN

MATENET ASSY REC HSG mit CPA offen und Klappe des Inner HSG geschlossen
MATENET ASSY REC HSG with CPA Unlocked and FLAP of INNER HSG closed

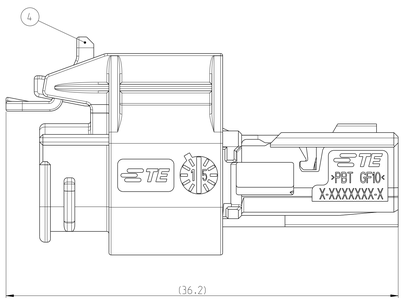

MATENET ASSY REC HSG mit CPA verriegelt und Klappe des Inner HSG geschlossen
MATENET ASSY REC HSG with CPA Locked and FLAP of INNER HSG closed

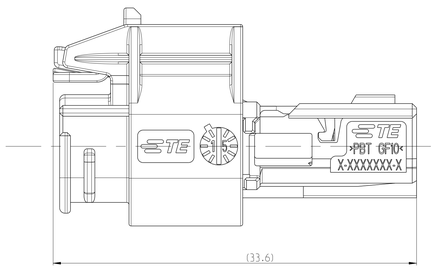

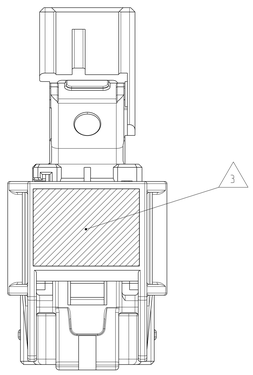

SEALED COMPONENT

9-1802105-1	AS SHOWN

ITEM	QTY	CODE	DESCRIPTION	MATERIAL	COLOR	WEIGHT [g]	REC HSG ASSY-MATEnet Sealed 1-Port: A (9-1802105-1)	B (9-1802105-2)	C (9-1802105-3)	J (9-1802105-7)	Z (9-1802105-9)	A (8-1802105-1)	B (8-1802105-2)	C (8-1802105-3)	J (8-1802105-7)	Z (8-1802105-9)	CODING / TE ASSY NUMBER
4	1	-	CPA	PA46-GF15	Red 3003	0.202						X					
3	1	-	SEAL PROTECTION COVER MATEnet Sealed 1-Port	PA6-GF15	black 9011	1.29	X										
2	1	-	RADIAL SEAL MATEnet Sealed 1-Port	LSR	Green 6010	0.232	X										
1	1	Z	Inner HSG, Code Z MATEnet Sealed 1-Port	PBT-GF10	water-blue 5021	1					X					X	
1	1	J	Inner HSG, Code J MATEnet Sealed 1-Port		beige 1001					X					X		
1	1	C	Inner HSG, Code C MATEnet Sealed 1-Port		blue 5012				X					X			
1	1	B	Inner HSG, Code B MATEnet Sealed 1-Port		white 9010			X					X				
1	1	A	Inner HSG, Code A MATEnet Sealed 1-Port		black 9011		X					X					

FOR PROTOTYPE B-SAMPLE ONLY
NUR FUER B-MUSTER

THIS DRAWING IS A CONTROLLED DOCUMENT.

DIMENSIONS: mm

TOLERANCES UNLESS OTHERWISE SPECIFIED:
0 PLC ±0.2
1 PLC ±0.1
2 PLC ±0.05
3 PLC ±
4 PLC ±
ANGLES ±
FINISH -

MATERIAL - -

DWN	N.SIMON	16SEP2016
CHK	X.ROUILLARD	16SEP2016
APVD	C.SCHRETTLINGER	16SEP2016

PRODUCT SPEC -
APPLICATION SPEC 114-94431
WEIGHT 2.6gr
CUSTOMER DRAWING

TE Connectivity

NAME REC HSG ASSY MATEnet Sealed 1-Port

SIZE	CASE CODE	DRAWING NO	RESTRICTED TO
A0	00779	C-1802105	-

SCALE 5:1 SHEET 2 OF 2 REV C