ITEM NO.	PART NUMBER	DESCRIPTION	QTY.	COMPONENT NOTES
1	50-00187	Connector, dc plug, 5.5x2.5xL20.5 mm, molding style, spring contacts	2	
2	30-00395	Wire, 2C TS, 18 AWG, UL2468, 300V, 80C, 4.4 mm, VW-1, PVC, 87A	1	
3	24-00006	Overmold, PVC	2	

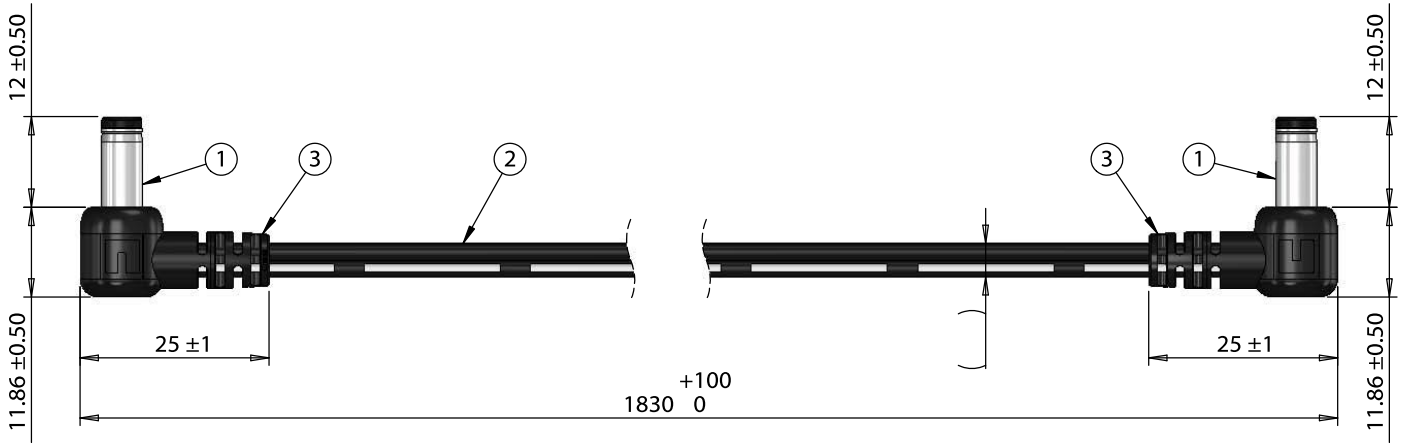

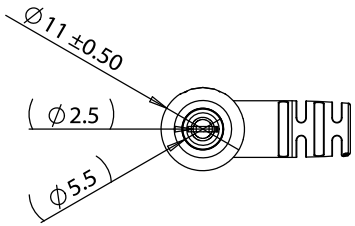

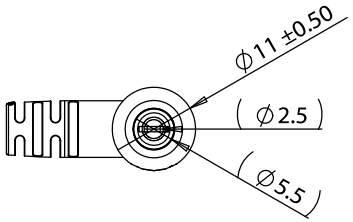

Wiring Diagram		
50-00187	wire color	50-00187
center	black with stripe	center
sleeve	black	sleeve

Notes:
Functionally equivalent components may be substituted

Revision:	Date:	Description:
A	7/28/2017	Initial release

Prepared: PS — Digitally signed by PS Date: 2017.07.28 15:30:45 -07'00'

Verified: LA — Digitally signed by LA Date: 2017.07.28 15:52:55 -07'00'

Dimensions are in millimeters.
Tolerances:
X: ± 0.5 mm
X.X: ± 0.3 mm
X.XX: ± 0.05 mm

Notes:
RoHS compliant
Function test: no open, no short circuit, no intermittent

Description:
Cable, 1830 mm, 5.5x2.5x12 mm 90° 50-00187 dc plug to same, 18 AWG, UL2468, 30-00395 wire

TENSILITY
tel 1.541.323.3228 800 877.670.7118
fax 1.541.323.4202 web tensility.com

Size: A
Part number: 10-02574
Scale: 1:1
Sheet 1 of 1

5 4 3 2 1