ECN MARK	ECN NO.	DESCRIPTION	DATE	
			2019/4/26	

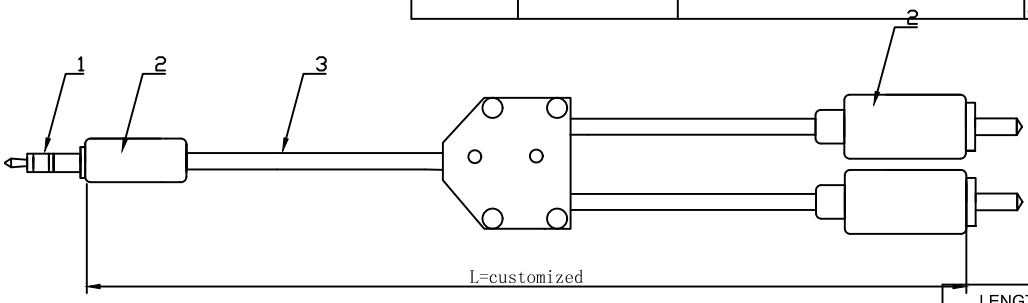

LENGTH
1000mm±30
2000mm±30
3000mm±40
5000mm±50

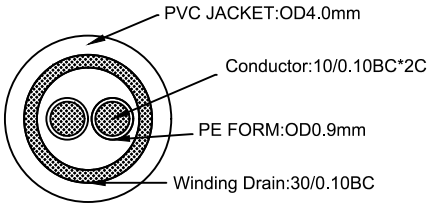

NOTE:
1.UNLESS OTHERWISE SPECIFIED:
ALL DIMENSIONS ARE IN MILLIMETER
2.THE LENGTH ACCORDING TO CLIENT

10/0.10BC*0.9*2C+30/0.10BC+AL*4.0MM

DWG NO	ITEM.	DESCRIPTIONS&SPECIFICATIONS	QTY.
	1	3.5MM Gold Plated	1PCS
	2	Copper Metal Shell	3PCS
	3	3.5MM CABLE OD:4.0MM 28AWG	1PCS
		RCA Gold Plated	2PCS

TOLERANCE	SIGNATURES	DATE	AUXUS	
20-99 ±20.00 100-999 ±30.0 1000-9999 ±50.00 10000-9999 ±100.00	DRAFT: *neo*	2019		
	CHECKED: *samo*		SCALE	TITLE
	APPROVAL: *zing*			
Unit:MM		REV	A1	DWG NO