THIS DRAWING CONTAINS INFORMATION THAT IS PROPRIETARY TO J.S.T. AND SHALL NOT BE USED OR SHOWN WITHOUT WRITTEN PERMISSION.

ITEM	CONNECTOR PART NO.	DESCRIPTION	IPI CHECK	EOR CHECK	Applicable Tooling
1	RSFR-1VF-K	RSF CONNECTOR BLACK HOUSING, W-W			APPLICATOR
2	SIM-51T-250N	TAB-IN TERMINAL – BRASS, TIN-PLATED			
3	UL1015, 16 AWG	BLACK			

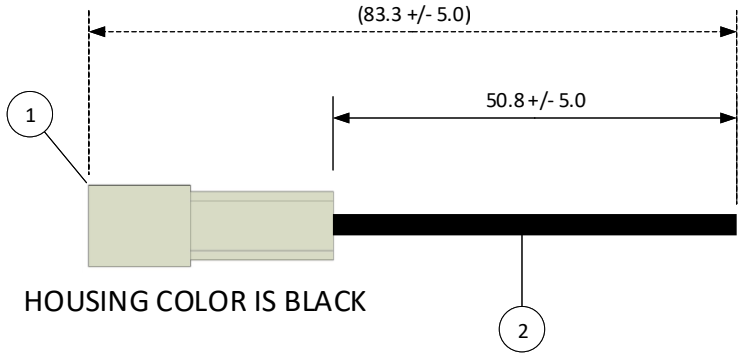

HOUSING COLOR IS BLACK

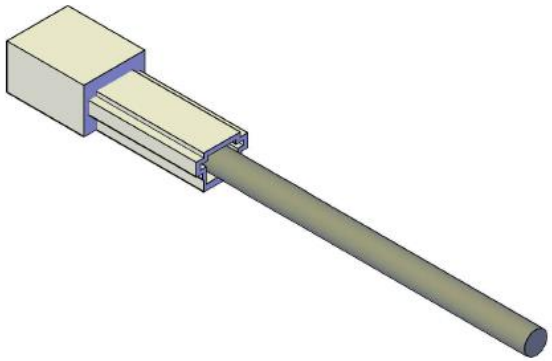

REV.	DESCRIPTION	DATE	BY

SCALE 1: 1	CUSTOMER NAME	CUSTOMER PART NO.
DIMENSIONS All dimensions are in MM with a tolerance of +/- 3.0 unless otherwise specified.	DESCRIPTION 2" INSIDE LENGTH – 1 POSITION, LIF, POS LOCK, .250, W-W INSULATED RECPT W/BLUNT LEADS, BLACK HSG MATES W/W-W PLUG 01RSFP16K51K	
DRAWN BY STEVEN PILKINGTON	ASSEMBLY PART NO. A01RSFR16K51K	
CHECKED BY JUSTIN BAKER	DRAWING NO. & REVISION GAM-118	REVISED 3/11/2016