THIS DOCUMENT IS THE PROPERTY OF KEYSTONE ELECTRONICS CORP. AND SHALL NOT BE REPRODUCED, DISTRIBUTED OR USED AS A BASIS FOR MANUFACTURE WITHOUT PRIOR WRITTEN PERMISSION FROM KEYSTONE ELECTRONICS CORP.

ACTUAL SIZE

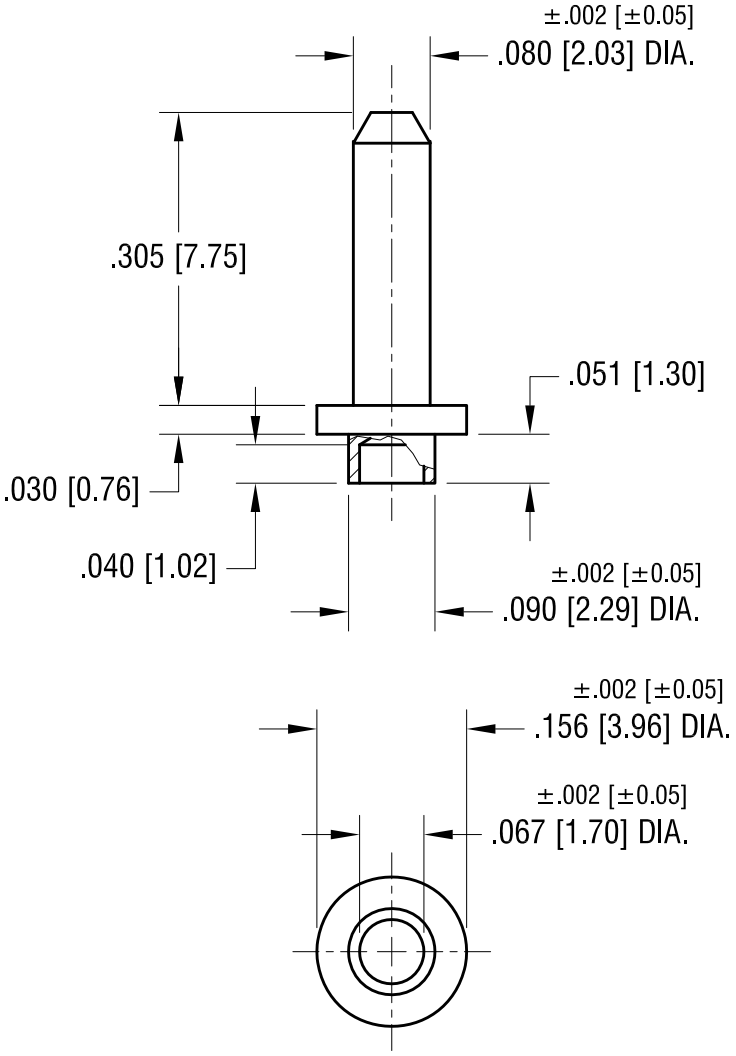

NOTE:
1. MOUNTING HOLE .094 [2.38] DIA.

DATE	DESCRIPTION	REV.
5.07.09	CHANGE AS PER ECN 09–037	A

KEYSTONE ELECTRONICS CORP.

www.keyelco.com • NEW HYDE PARK, NY 11040 • Tel (516) 328-7500

PART NAME: MICRO PIN, SWAGE MOUNT			
MATERIAL: BRASS			
FINISH: TIN PLATE	DRN BY: BOONE	DATE: 9.06.96	
	APP'D: RH	SCALE: 5X	
TOLERANCES INCH [MM] DECIMAL ± .005 [± 0.13] ANGULAR ± 1° UNLESS OTHERWISE SPECIFIED	CODE: C	DWG NO. 1455-1	