REVISIONS					
REV	ECO	DESCRIPTION	DATE	BY	APPR
A3	-	RELEASE NEW DRAWING FORMAT	10/23/13	DRP	-
A4	-	ADD PANEL CUTOUTS VIEW	11/20/15	JARRY	TOMMY
A5	-	MODIFY TOLERANCE	11/10/22	IAN	TOMMY

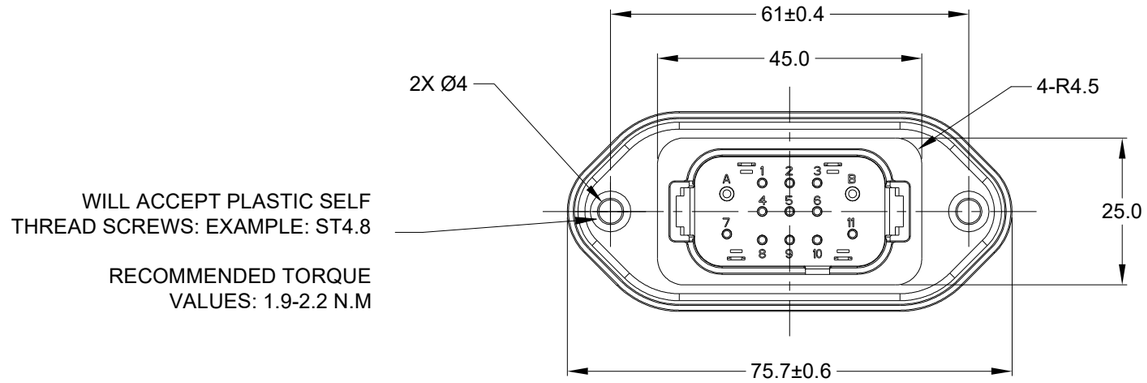

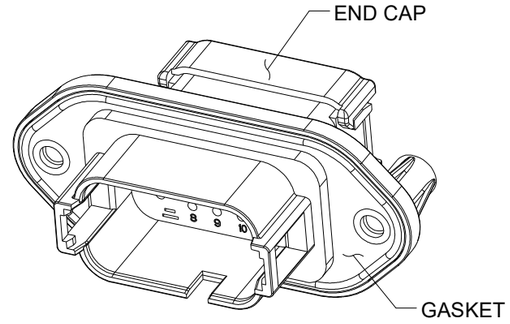

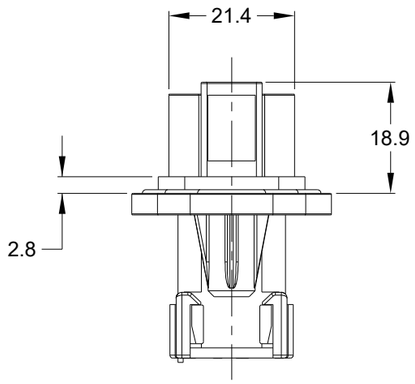

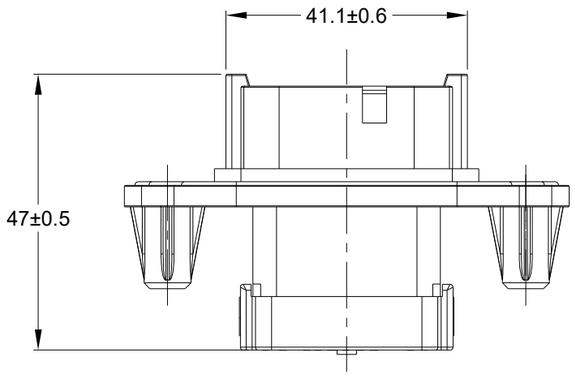

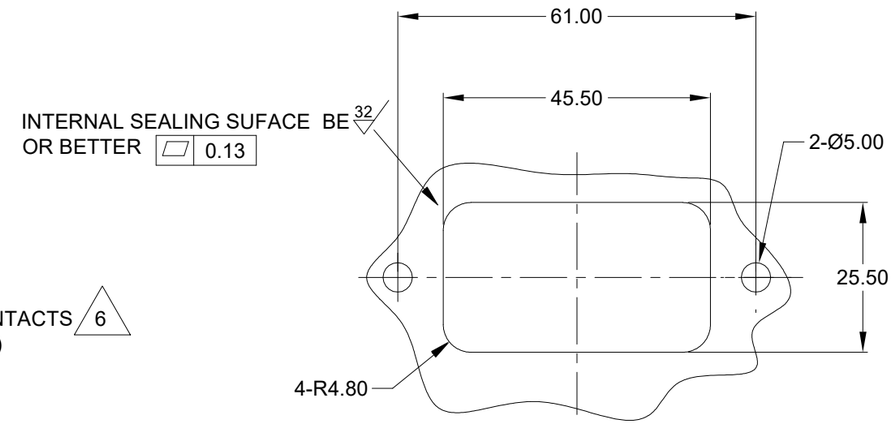

RECOMMENDED PANEL CUTOUTS

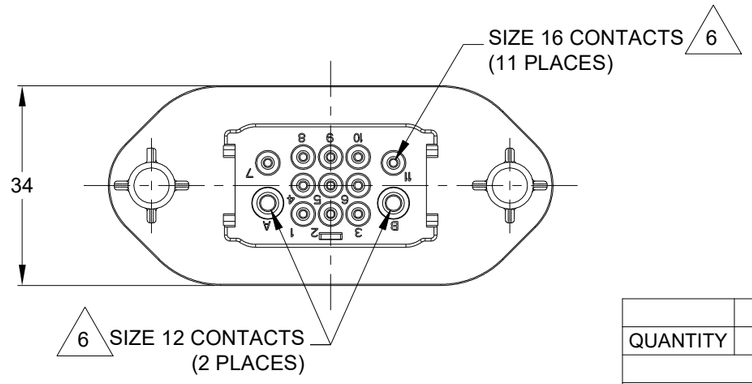

NOTES: UNLESS OTHERWISE SPECIFIED

1. MATERIAL:
   HOUSING: THERMOPLASTIC; COLOR: BLACK
   SEAL: SILICONE RUBBER

2. MODIFICATIONS: REDUCED DIAMETER WIRE SEAL;
   END CAP

3. SPECIFICATIONS:
   3.1 CURRENT RATING: SEE NOTE 6
   3.2 OPERATING TEMPERATURE: -55°C TO +125°C
   3.3 DIELECTRIC WITHSTANDING VOLTAGE: LESS THAN 2 MILLIAMPS CURRENT LEAKAGE @ 1500 VOLTS AC.
   3.4 INSULATION RESISTANCE: 1000 MEGOHMS MIN @ 25°C.
   3.5 MOISTURE RESISTANCE: IP67 (MATED CONDITION)
   3.6 MATING CYCLE DURABILITY: 100 CYCLES
   3.7 RoHS COMPLIANT

4. MATING PART: AT1612-13SB* PLUG
   (* = MODIFICATIONS)

5. ALL DIMENSIONS ARE FOR REFERENCE USE ONLY.

6 CONTACT SIZE AND REAR SEAL WIRE RANGE:

CONTACT SIZE	MIN. INSUL O.D.	MAX. INSUL O.D.	TYPICAL WIRE RANGE	CURRENT RATING
16	1.35 mm (.053 in)	3.05 mm (.120 in)	14-20 AWG	13 AMPS
12	2.46 mm (.097 in)	4.01 mm (.158 in)	12-14 AWG	25 AMPS

QUANTITY	PART NUMBER	DESCRIPTION	ITEM
	AT1612-13PB-RDG		

MATERIALS LIST

UNLESS OTHERWISE SPECIFIED
1) All dimensions are in metric(mm).
2) Tolerances are as follows:
1 PL DEC ±0.30 | Fractions ±1/64
2 PL DEC ±0.15 | Angles ±1°
3 PL DEC ±0.08
3) Note reference = X

MATERIAL SPECIFICATIONS:

PROCESS SPECIFICATIONS:

NEXT ASS'Y:

SIGNATURES		DATE
DRAWN:	IAN	11/10/22
CHECKED:	SULLEN	11/10/22
ENGINEER:		
APPROVAL:	TOMMY	11/11/22
CUSTOMER:		

THIS DRAWING IS SUPPLIED FOR INFORMATION ONLY. DESIGN FEATURES, SPECIFICATIONS AND PERFORMANCE DATA SHOWN HEREON ARE THE PROPERTY OF THE AMPHENOL CORPORATION. NO RIGHTS OF REPRODUCTION ARE IMPLIED. ALL DIMENSIONS ARE SUBJECT TO NORMAL MANUFACTURING VARIATIONS.

Amphenol
Sine Systems - www.amphenol-sine.com
44724 Morley Drive
Clinton Township, MI 48036

AT SERIES, 13 PIN RECEPTACLE W/FLANGE, GASKET & REDUCED DIAMETER SEAL

SIZE	TYPE	DWG NO:	REVISION
B	C-	AT1612-13PB-RDG	A5

SCALE: NONE SHEET 1 OF 1

TITLE: AT,13 PIN RECEPT. W/ FLANGE,GASKET & REDUCED DIA. SEAL
DWG NO: AT1612-13PB-RDG
REV: A5
SH: 1
OF: 1