REVISION HISTORY				
ECO	REV	DESCRIPTION	APPROVED	DATE
-	1	PROTOTYPE	ZP	3-14-19

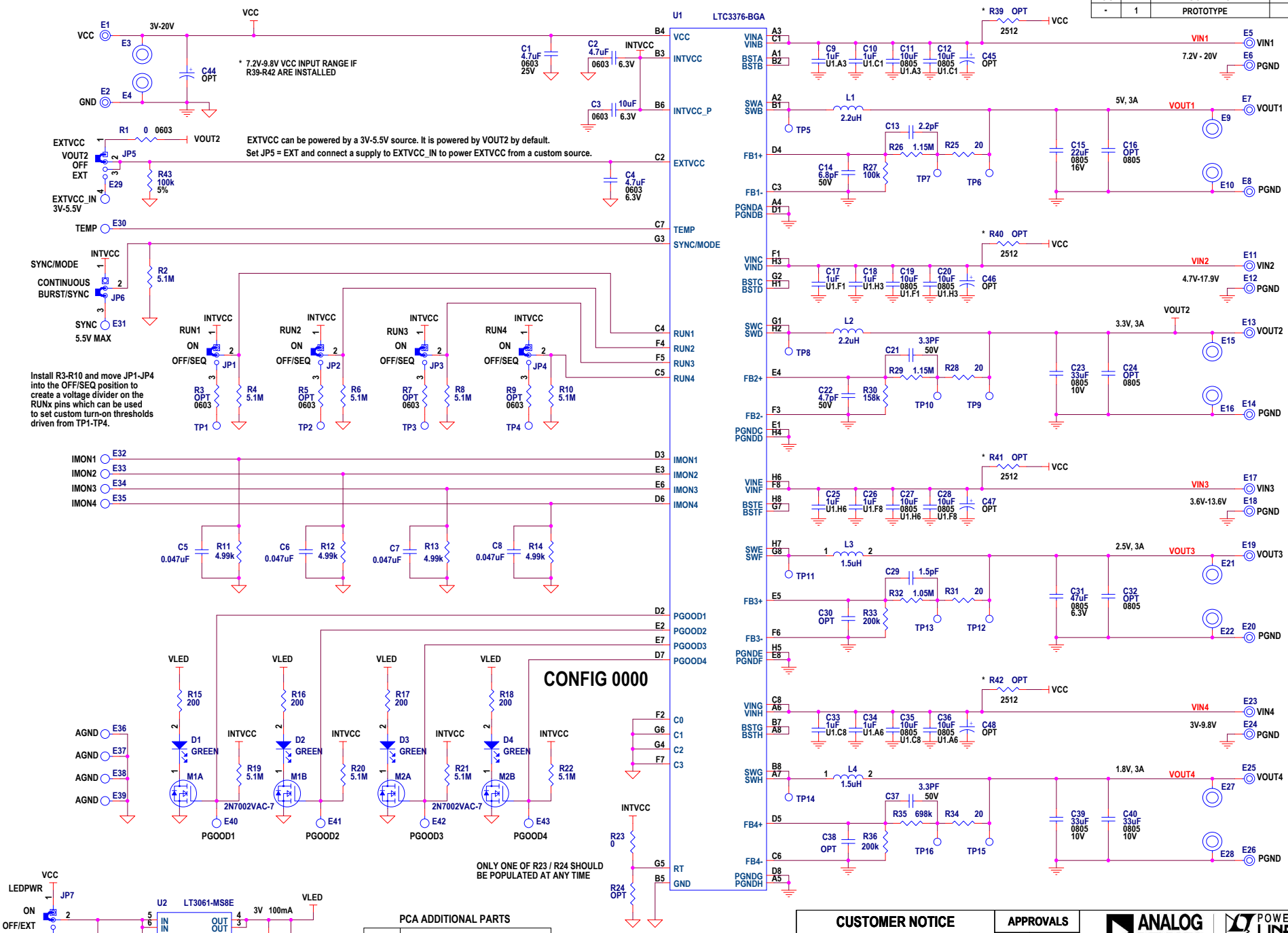

PCA ADDITIONAL PARTS

MP1	STANDOFF,NYLON,SNAP-ON,0.625"
MP2	STANDOFF,NYLON,SNAP-ON,0.625"
MP3	STANDOFF,NYLON,SNAP-ON,0.625"
MP4	STANDOFF,NYLON,SNAP-ON,0.625"
LB1	LABEL
STNCL1	TOOL, STENCIL, 700-DC2966A REV01
PCB1	PCB, DC2966A REV01

UNLESS OTHERWISE SPECIFIED
1. RESISTORS: OHMS, 0402, 1%
2. CAPACITORS: 0402, 10%, 25V

CUSTOMER NOTICE

LINEAR TECHNOLOGY HAS MADE A BEST EFFORT TO DESIGN A CIRCUIT THAT MEETS CUSTOMER-SUPPLIED SPECIFICATIONS; HOWEVER, IT REMAINS THE CUSTOMER'S RESPONSIBILITY TO VERIFY PROPER AND RELIABLE OPERATION IN THE ACTUAL APPLICATION. COMPONENT SUBSTITUTION AND PRINTED CIRCUIT BOARD LAYOUT MAY SIGNIFICANTLY AFFECT CIRCUIT PERFORMANCE OR RELIABILITY. CONTACT LINEAR TECHNOLOGY APPLICATIONS ENGINEERING FOR ASSISTANCE.

THIS CIRCUIT IS PROPRIETARY TO LINEAR TECHNOLOGY AND SUPPLIED FOR USE WITH LINEAR TECHNOLOGY PARTS.

APPROVALS	
PCB DES.	
APP ENG.	ZP

ANALOG DEVICES www.analog.com
POWER BY LINEAR www.linear.com Phone: (408)432-1900

IC NO. LTC3376

TITLE: DEMO CIRCUIT SCHEMATIC, 20V, 4-CHANNEL, BUCK DC/DC WITH 8x CONFIGURABLE 1.5A POWER STAGES

SKU NO. DC2966A

PCA BOM: 700-DC2966A_REV01
PCA ASS'Y: 705-DC2966A_REV01

SCHEMATIC NO. AND REVISION: 710-DC2966A_REV01

SIZE: N/A | SCALE = NONE | DATE: 03-14-19 | SHEET 1 OF 1