SHEET OF

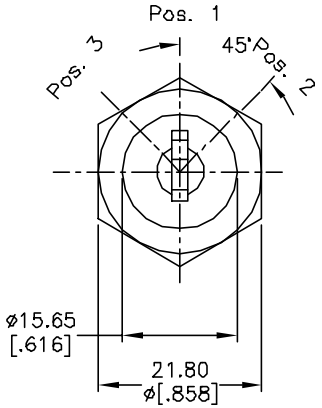

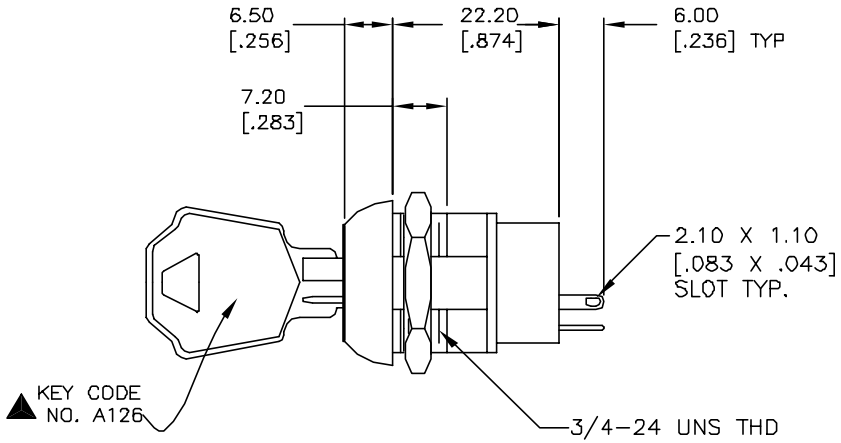

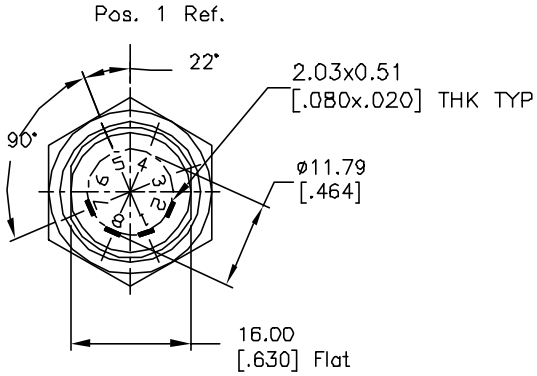

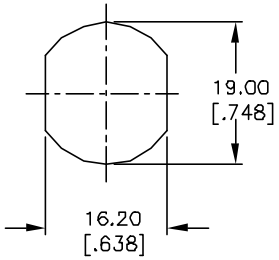

RECOMMENDED PANEL LAYOUT

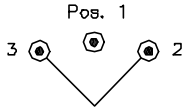

CIRCUIT: DP (45° INDEXING)
CONTACT CONFIGURATION

SWITCH FUNCTION		
CONNECTED TERMINAL #		
POS. 1	POS. 2	POS. 3
8-1	1-2	7-8

LEGEND
● =Detent Positions (45° or 90°)
◉ =Key pull possible in these positions

NOTES:

1. ALL DIMENSIONS IN MM [INCH]
2. GENERAL TOLERANCE: X.X=±0.4
   X.XX=±0.25
3. TERM. NOS. FOR REF. ONLY
4. CONTACT RATING: 4A @125VAC/28VDC, 2A @250VAC
5. CONTACT RESISTANCE: Below 10 milliohms
6. DIELECTRIC STRENGTH: 1KV RMS min. at sea level
7. ELECTRICAL LIFE: 10,000 make-and-break cycles at full load.
8. ▲ DESIGNATE MAJOR FEATURES
9. MATERIALS:
   CONTACTS: Silver Plated CU (Q Contact material)
   TERMINALS: GOLD FLASH Over Silver (Q Contact material)
   MOUNTING NUT: Nickel Plated zinc alloy
   CONTACT SPRING: Piano Wire
   ▲ KEYS: (2 Keys) Brass with code no. A126

REV.	ECN No.	DESCRIPTION	DATE	CHKD
A	11211	RELEASED FOR PRODUCTION	2/01/01	CJB

THE INFORMATION CONTAINED IN THIS DOCUMENT IS PROPRIETARY TO E-SWITCH AND IS NOT TO BE COPIED OR TRANSFERRED

E-SWITCH®

TITLE: K0130I (Key Code No. A126)

SCALE	DATE	DR	DWG	REV
1:1	2/01/01	CJB	K200218	A