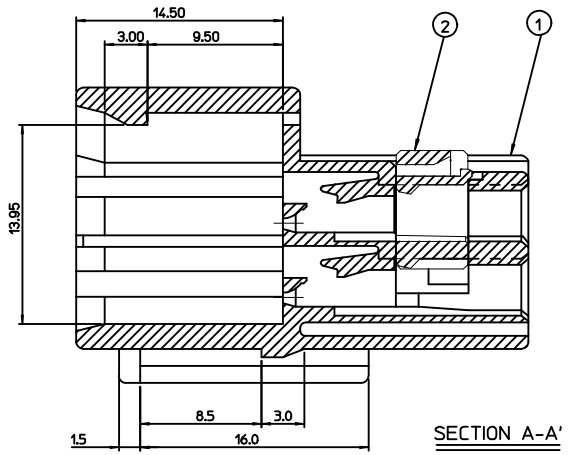

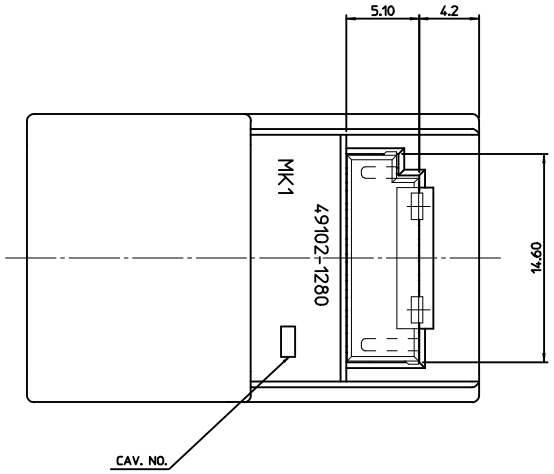

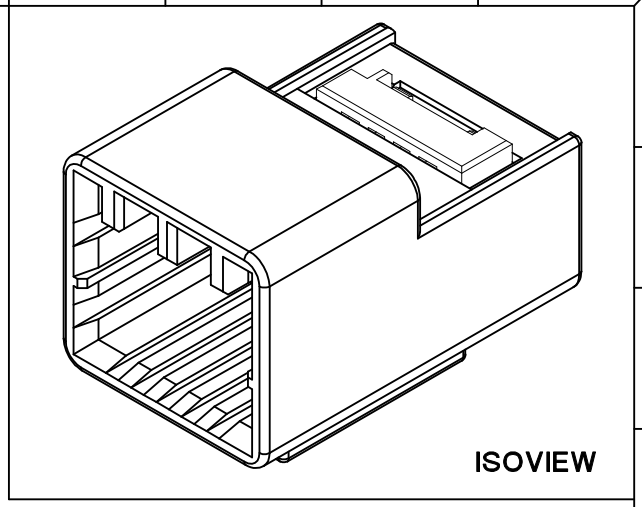

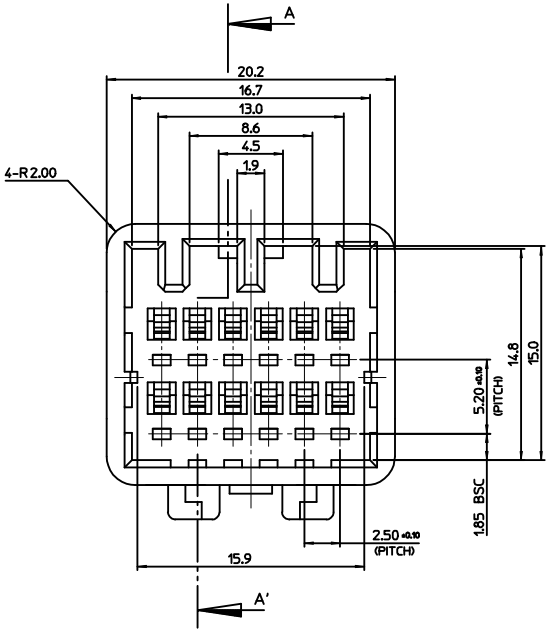

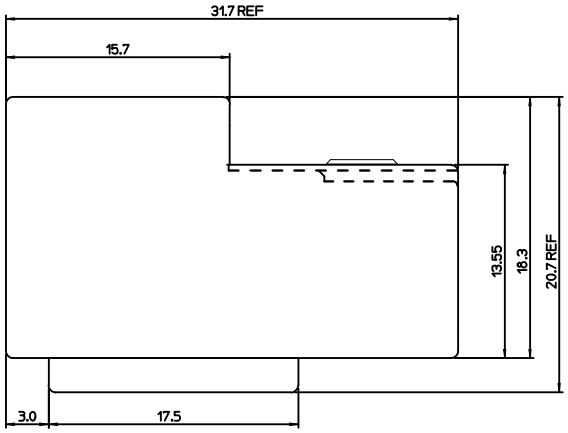

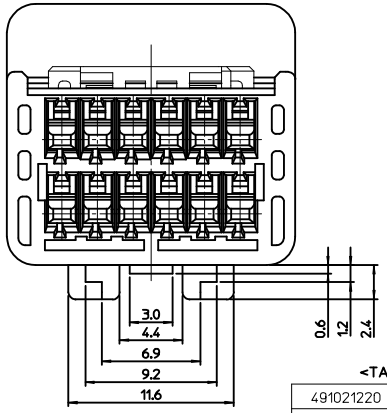

<NOTE>

1. APPLICABLE MALE TERMINAL : 50660-9001
2. MATING FEMALE HOUSING ASS'Y : 64002-1215
3. MATING FEMALE TERMINAL : 50654-1001

<PART LIST>

NO.	PART NAME	MATERIAL	USAGE	REMARK
①	MALE HSG 12P(CLIP TYPE)	POLYESTER	1	NATURAL
②	MALE TPA 12P	POLYESTER	1	YELLOW

<TABLE 1>

491021220	49102-1220
MATERIAL NO.	ORDER NO.

NEW RELEASED
EC NO: KOR2009-0153
DRWN:EOKIM 2009/06/04
CHKD:BCYOON 2009/07/06
APPR:YUNSIKKIM 2009/07/07
DESCRIPTION
REV A

QUALITY SYMBOLS
▼=0
Ⓒ=0

GENERAL TOLERANCES (UNLESS SPECIFIED)

	mm	INCH
4 PLACES	± ---	± ---
3 PLACES	± ---	± ---
2 PLACES	± 0.20	± ---
1 PLACE	± 0.3	± ---
ANGULAR ± 1 °		

DRAFT WHERE APPLICABLE MUST REMAIN WITHIN DIMENSIONS

DIMENSION STYLE: MM ONLY
SCALE: 4:1
DESIGN UNITS: METRIC
THIRD ANGLE PROJECTION

DRAWN BY: EOKIM DATE: 2008/11/13
CHECKED BY: BCYOON DATE: 2008/11/13
APPROVED BY: EHJUNG DATE: 2008/11/13

TITLE: 040 MIRROR MALE CONNECTOR 12P-CLIP TYPE

molex MOLEX INCORPORATED

MATERIAL NO.: SEE TABLE 1
DOCUMENT NO.: SD-49102-002
SHEET NO.: 1 OF 1
SIZE: A2

THIS DRAWING CONTAINS INFORMATION THAT IS PROPRIETARY TO MOLEX INCORPORATED AND SHOULD NOT BE USED WITHOUT WRITTEN PERMISSION