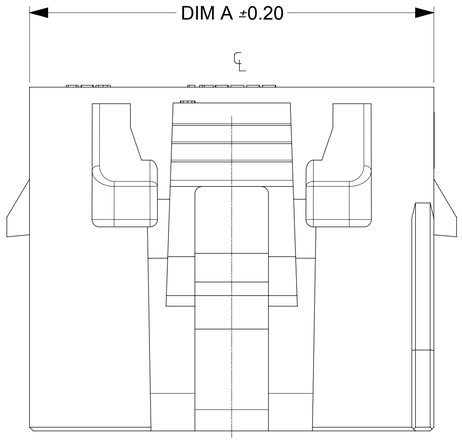

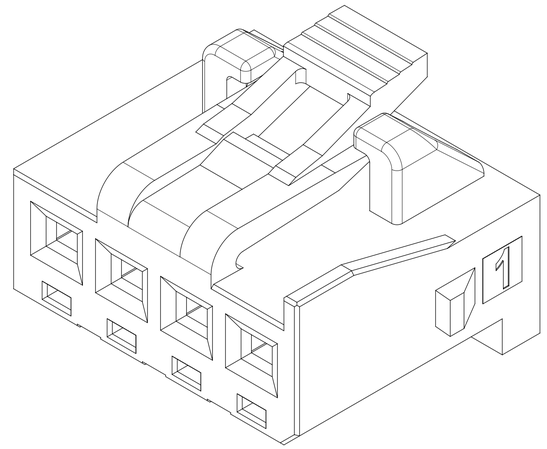

ISOMETRIC VIEW FOR 4 CIRCUIT

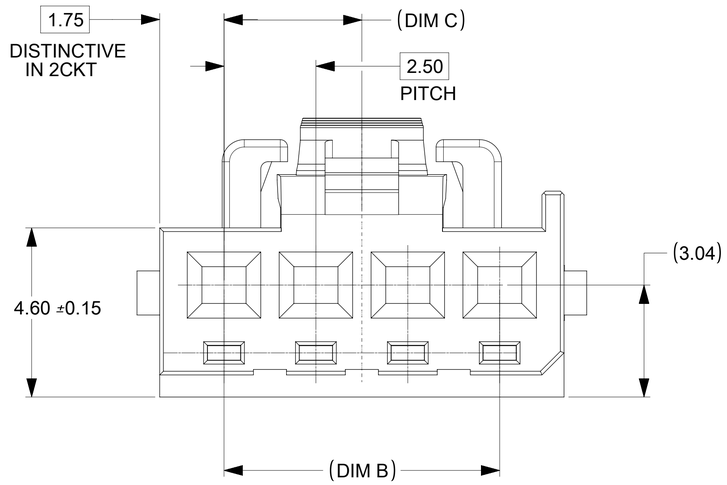

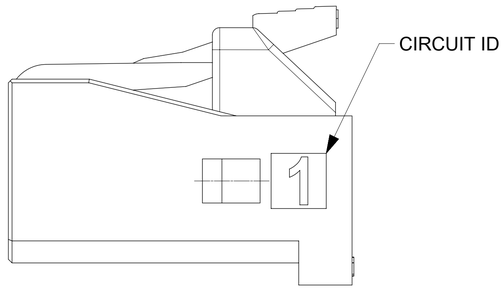

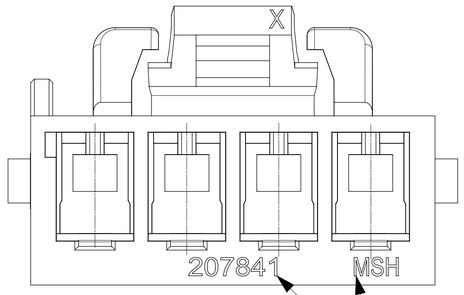

SEE NOTE 6

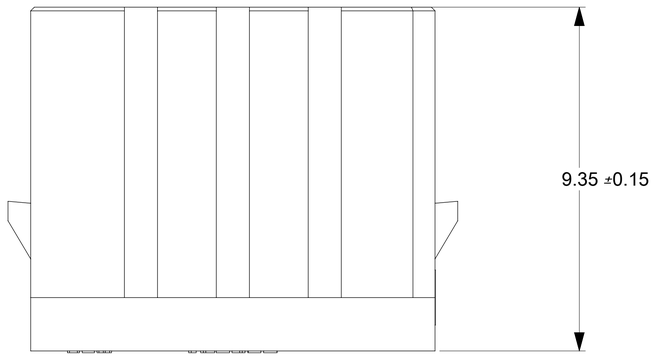

DISTINCTIVES IN 2 CIRCUIT

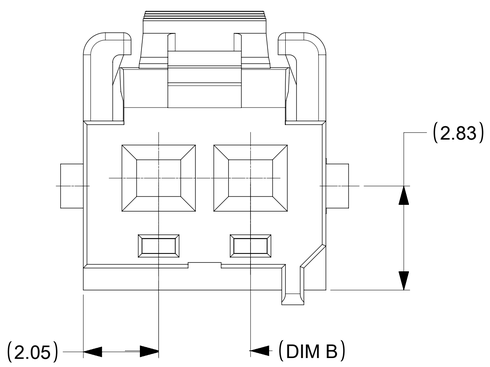

CKT	PART NUMBER	DIM.A	DIM. B	DIM. C
02	2078410002	6.61	2.50	1.25
03	2078410003	8.50	5.00	2.50
04	2078410004	11.00	7.50	3.75
05	2078410005	13.50	10.00	5.00
06	2078410006	16.00	12.50	6.25
07	2078410007	18.50	15.00	7.50
08	2078410008	21.00	17.50	8.75

NOTES:
1. MATERIAL: PA66, UL 94V-0, COLOR-BLACK
2. PRODUCT SPECIFICATION: 2079020001-PS
3. PACKAGING SPECIFICATION: 2078410000-PK
4. COSMETIC SPECIFICATION: PS-45499-002 CLASS B
5. HOUSING ACCEPTS TERMINALS FROM 46626 SERIES
6. MOLEX LOGO AND SERIES ID

DOCUMENT STATUS	P1	RELEASE DATE	2019/04/26 06:02:42

SYMBOLS: A = 0, C = 0, F = 0, S = 0, B = 0, E = 0, X = 0, = 0, = 0, V = 0

THIS DRAWING CONTAINS INFORMATION THAT IS PROPRIETARY TO MOLEX ELECTRONIC TECHNOLOGIES, LLC AND SHOULD NOT BE USED WITHOUT WRITTEN PERMISSION

DIMENSION UNITS: mm — SCALE: 10:1

GENERAL TOLERANCES (UNLESS SPECIFIED)

ANGULAR TOL	±	0.5 °
4 PLACES	±	
3 PLACES	±	
2 PLACES	±	0.25
1 PLACE	±	0.3
0 PLACES	±	

DRAFT WHERE APPLICABLE MUST REMAIN WITHIN DIMENSIONS

CURRENT REV DESC: INTIAL RELEASE

EC NO: 616215
DRWN: ISHWARG 2019/02/20
CHK'D: GJEEVANSURES 2019/04/25
APPR: ISHWARG 2019/04/26

INITIAL REVISION:
DRWN: SUDAYGUNAGI 2018/06/18
APPR: ISHWARG 2019/02/20

THIRD ANGLE PROJECTION — DRAWING: A1-SIZE — SERIES: 207841

molex

RECEPTACLE HOUISNG FOR L1NK 250

PRODUCT CUSTOMER DRAWING

DOCUMENT NUMBER	DOC TYPE	DOC PART	REVISION
2078410004-SD	PSD	000	A1

MATERIAL NUMBER | CUSTOMER | SHEET NUMBER: 1 OF 2

POLARIZATION

2 & 3 CKT

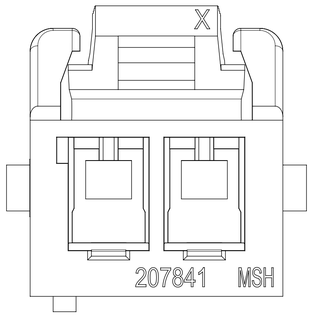

4 TO 10 CKT

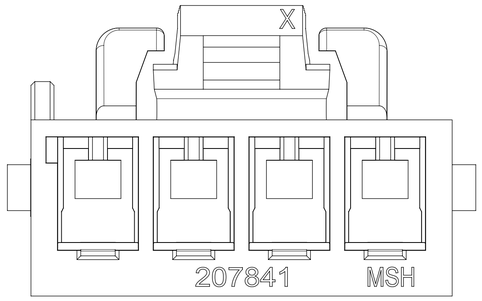

ISOMETRIC OF 2 & 3 CKT

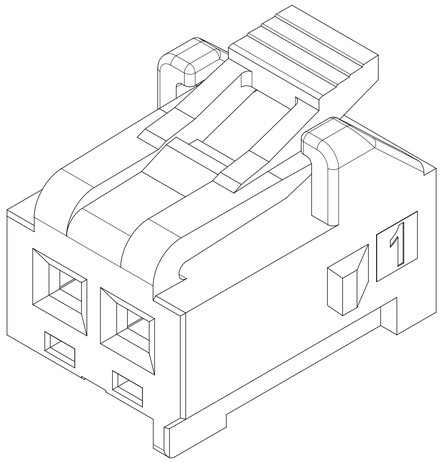

ISOMETRIC OF 4 TO 10 CKT

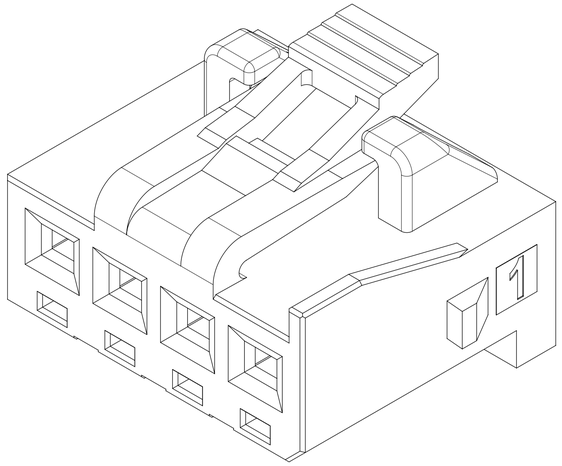

SYMBOLS	
A	= 0
C	= 0
F	= 0
S	= 0
	= 0
C	= 0
	= 0
	= 0
D	= 0

THIS DRAWING CONTAINS INFORMATION THAT IS PROPRIETARY TO MOLEX ELECTRONIC TECHNOLOGIES, LLC AND SHOULD NOT BE USED WITHOUT WRITTEN PERMISSION

DIMENSION UNITS	SCALE
mm	10:1

GENERAL TOLERANCES (UNLESS SPECIFIED)	
ANGULAR TOL	± 0.5 °
4 PLACES	±
3 PLACES	±
2 PLACES	± 0.25
1 PLACE	± 0.3
0 PLACES	±

DRAFT WHERE APPLICABLE MUST REMAIN WITHIN DIMENSIONS

CURRENT REV DESC: INTIAL RELEASE

EC NO: 616215
DRWN: ISHWARG 2019/02/20
CHK'D: GJEEVANSURES 2019/04/25
APPR: ISHWARG 2019/04/26

INITIAL REVISION:
DRWN: SUDAYGUNAGI 2018/06/18
APPR: ISHWARG 2019/02/20

molex

RECEPTACLE HOUISNG FOR L1NK 250

PRODUCT CUSTOMER DRAWING

DOCUMENT NUMBER	DOC TYPE	DOC PART	REVISION
2078410004-SD	PSD	000	A1

THIRD ANGLE PROJECTION	DRAWING	SERIES	MATERIAL NUMBER	CUSTOMER	SHEET NUMBER
	A1-SIZE	207841			2 OF 2

DOCUMENT STATUS	P1	RELEASE DATE	2019/04/26 06:02:42

TEMPLATE: molex-dc-prod-v1
REVISION: H
DATE: 2018/07/18