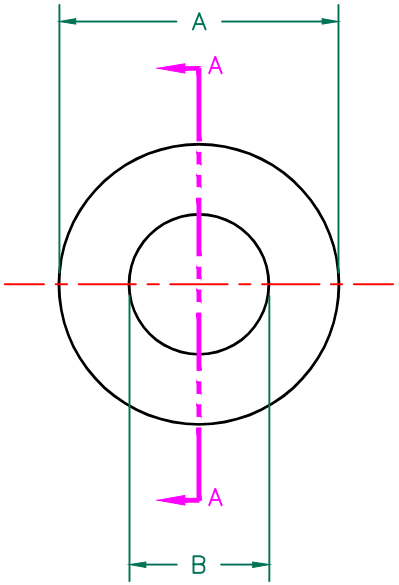

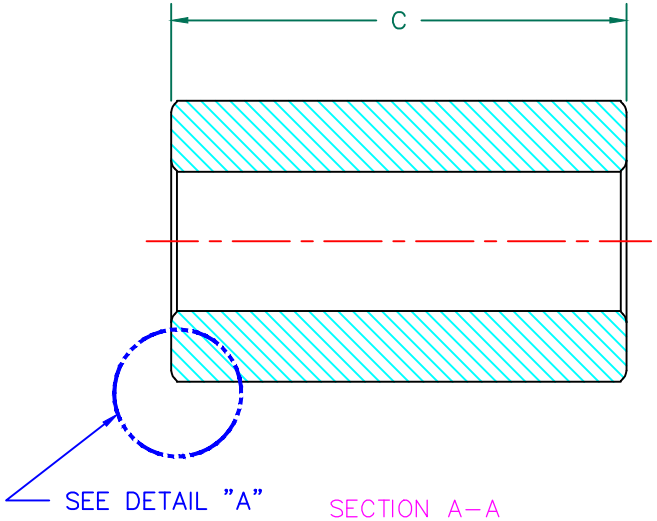

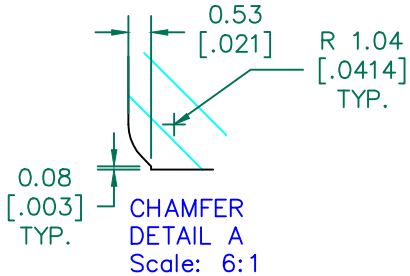

IMPEDANCE (Z)			
Frequency	25 MHz	100 MHz	300 MHz
Nominal (REF)	212 Ω	369 Ω	477 Ω
Minimum	- Ω	295 Ω	- Ω

Z vs. FREQUENCY
(REF. ONLY)

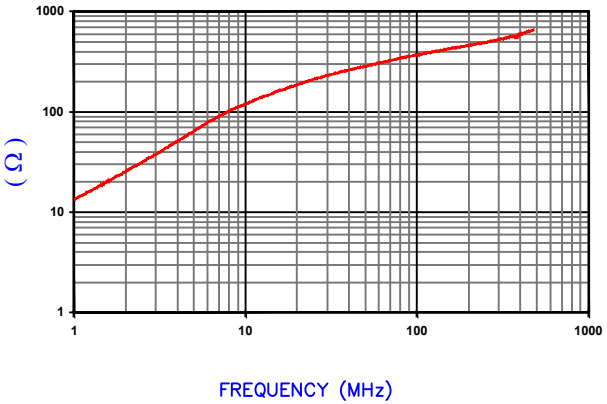

AGILENT E4991A Impedance/Material Analyzer
HP 16092A Test Fixture,

FERRITE CORE DIMENSIONS (SPEC): mm [in]

A	25.91 [1.020]	±	0.50 [.020]
B	12.83 [.505]	±	0.30 [.012]
C	42.00 [1.653]	±	2.00 [.079]

WEIGHT/1000 82.46 kgs 181.79 lbs

NOTES:

1. PARTS MUST BE TUMBLED, BURNISHED OR DEBURRED TO REMOVE ALL BURRS AND SHARP EDGES.
2. COSMETIC SPECIFICATION REFER TO WI–QA–038.

SCALE DRAWING 1:1

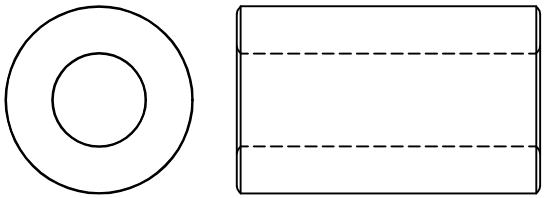

28B1020–300

DIMENSIONS ARE IN mm [INCHES].

REV	DESCRIPTION	DATE	INT
B	UPDATE LOGO	09/07/16	QIU
A	ORIGINAL DRAFT	01/08/09	JRK

This print is the property of Laird Tech. and is loaned in confidence subject to return upon request and with the understanding that no copies shall be made without the written consent of Laird Tech. All rights to design or invention are reserved.

PROJECT/PART NUMBER:	REV	PART TYPE:	DRAWN BY:
28B1020–300	B	CNZ CORE	JRK

DATE:	SCALE:	MATERIAL:
01/08/09	1.5 : 1	Ferrite
CAD # 28B1020–300–B	TOOL # B1020	